12-Bit, 40-kSPS, Low Power Sampling ANALOG-TO-DIGITAL CONVERTER with Internal Reference and Serial Interface

FEATURES

- **40-kHz Minimum Sampling Rate**
- **Very Low Power: 25 mW**
- **±3.33-V, ±5-V, ±10-V, 4-V, and 10-V Input Ranges**
- **73.9-dB SINAD with 10-kHz Input**
- **±0.5 LSB Max INL**
- **±0.5 LSB Max DNL, 12-Bit NMC**
- **±5-mV BPZ, ±2 ppm/°C BPZ Drift**
- **72-dB Min SINAD, 80-dB Min SFDR**
- **Uses Internal or External 2.5-V Reference**
- **No External Calibration Resistors Required**
- **Single 5-V Analog Supply:**
  - **32.5-mW Max Power Dissipation**
  - **50-µW Max Power-Down Mode**
- **SPI™-Compatible Serial Port up to 20MHz, with Master/Slave Feature**
- **Global $\overline{\text{CONV}}$ and 3-Stated Bus for Multi-Chip Simultaneous S/H Operation**
- **Pin-Compatible with ADS7812 and 16-Bit ADS7813/8513**
- **SO-16 Package**

APPLICATIONS

- **Industrial Process Control**
- **Test Equipment**
- **Robotics**
- **DSP Servo Control**
- **Medical Instrumentation**
- **Portable Data Acquisition Systems**

DESCRIPTION

The ADS8512 is a complete low-power, single 5-V supply, 12-bit sampling analog-to-digital (A/D) converter. It contains a complete 12-bit capacitor-based, successive approximation register (SAR) A/D converter with sample-and-hold (S/H), clock, reference, and serial data interface. The converter can be configured for a variety of input ranges including ±10 V, ±5 V, 0 V to 10 V, and 0.5 V to 4.5 V. A high-impedance, 0.3-V to 2.8-V input is also available with input impedance greater than 10 MΩ. For most input ranges, the input voltage can swing to 25 V or –25 V without damage to the converter.

An SPI-compatible serial interface allows data to be synchronized to an internal or external clock. The ADS8512 is specified at 40-kHz sampling rate over the –40°C to +85°C industrial temperature range.

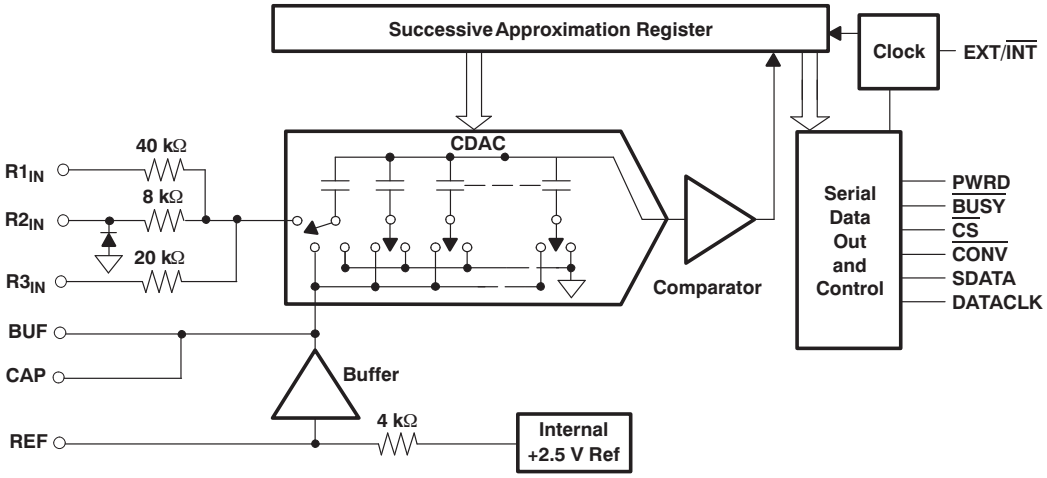

Please be aware that an important notice concerning availability, standard warranty, and use in critical applications of Texas Instruments semiconductor products and disclaimers thereto appears at the end of this data sheet.

TMS320 is a trademark of Texas Instruments.
SPI is a trademark of Motorola, Inc.
All other trademarks are the property of their respective owners.

PRODUCTION DATA information is current as of publication date. Products conform to specifications per the terms of the Texas Instruments standard warranty. Production processing does not necessarily include testing of all parameters.

Copyright © 2008, Texas Instruments Incorporated

These devices have limited built-in ESD protection. The leads should be shorted together or the device placed in conductive foam during storage or handling to prevent electrostatic damage to the MOS gates.

PACKAGE/ORDERING INFORMATION(1)

PRODUCT	MINIMUM INL (LSB)	NO MISSING CODES	MINIMUM SINAD (dB)	SPECIFIED TEMPERATURE RANGE	PACKAGE-LEAD	PACKAGE DESIGNATOR	ORDERING NUMBER	TRANSPORT MEDIA, QUANTITY
ADS8512IB	±0.5	12	72	-40°C to +85°C	SO-16	DW	ADS8512IBDW	Tube, 20
							ADS8512IBDWR	Tape and Reel, 1000
ADS8512I	±1	12	70	-40°C to +85°C	SO-16	DW	ADS8512IDW	Tube, 20
							ADS8512IDWR	Tape and Reel, 1000

(1) For the most current package and ordering information, see the Package Option Addendum at the end of this document, or see the TI website at www.ti.com.

ABSOLUTE MAXIMUM RATINGS(1)(2)

Over operating free-air temperature range (unless otherwise noted).

PARAMETER		UNIT
Analog inputs	$R1_{IN}$	±25 V
	$R2_{IN}$	±25 V
	$R3_{IN}$	±25 V
	REF	V_S + 0.3 V to GND – 0.3 V
Ground voltage differences	GND	±0.3 V
	V_S	6 V
Digital inputs		–0.3 V to V_S + 0.3 V
Maximum junction temperature		+165°C
Storage temperature range		–65°C to +150°C
Internal power dissipation		700 mW
Lead temperature (soldering, 1,6 mm from case, 10 seconds)		+260°C

(1) Stresses above those listed under *Absolute Maximum Ratings* may cause permanent damage to the device. Exposure to absolute maximum conditions for extended periods may affect device reliability.
(2) All voltage values are with respect to network ground terminal.

ELECTRICAL CHARACTERISTICS

At T_A = -40°C to +85°C, f_S = 40 kHz, V_S = 5 V, and using internal reference and fixed resistors, unless otherwise specified.

PARAMETER	TEST CONDITIONS	ADS8512I			ADS8512IB			UNIT
		MIN	TYP	MAX	MIN	TYP	MAX	
Resolution				12			12	Bits
ANALOG INPUT								
Voltage ranges			See Table 1			See Table 1		V
Impedance			See Table 1			See Table 1		kΩ
Capacitance			45			45		pF
THROUGHPUT SPEED								
Conversion time	Acquire and convert			20			20	µs
Complete cycle				25			25	µs
Throughput rate		40			40			kHz

Copyright © 2008, Texas Instruments Incorporated

ELECTRICAL CHARACTERISTICS (continued)

At T_A = -40°C to +85°C, f_S = 40 kHz, V_S = 5 V, and using internal reference and fixed resistors, unless otherwise specified.

PARAMETER		TEST CONDITIONS	ADS8512I			ADS8512IB			UNIT
			MIN	TYP	MAX	MIN	TYP	MAX	
DC ACCURACY									
INL	Integral linearity error		–1	±0.1	1	–0.5	±0.1	0.5	LSB(1)
DNL	Differential linearity error		–1	±0.1	1	–0.5	±0.1	0.5	LSB
	No missing codes		12			12			Bits
	Transition noise(2)			0.05			0.05		LSB
	Gain error			±0.2			±0.1		%
	Full scale error(3)(4)		-0.5		0.5	–0.25		0.25	%
	Full scale error drift			±10			±10		ppm/°C
	Full scale error(3)(4)	External 2.5-V reference	–0.5		0.5	–0.25		0.25	%
	Full scale error drift	External 2.5-V reference		±0.5			±0.5		ppm/°C
	Bipolar zero error(3)	Bipolar ranges	–10		10	–5		5	mV
	Bipolar zero error drift	Bipolar ranges		±2			±2		ppm/°C
	Unipolar zero error(3)	Unipolar ranges	–6		6	–6		6	mV
	Unipolar zero error drift	Unipolar ranges		±3			±3		ppm/°C
	Recovery time to rated accuracy from power down(5)	1-µF capacitor to CAP		300			300		µs
	Power-supply sensitivity	+4.75 V < V_S < +5.25 V			±0.75			±0.75	LSB
AC ACCURACY									
SFDR	Spurious-free dynamic range	f_{IN} = 1 kHz, ±10 V	80	98		80	98		dB(6)
THD	Total harmonic distortion	f_{IN} = 1 kHz, ±10 V		–96	–80		–98	–80	dB
SINAD	Signal-to-(noise+distortion)	f_{IN} = 1 kHz, ±10 V	70	74		72	74		dB
		–60 dB input		30			32		
SNR	Signal-to-noise	f_{IN} = 1 kHz, ±10 V	70	74		72	74		dB
	Usable bandwidth(7)			130			130		kHz
	Full-power bandwidth (–3 dB)			600			600		kHz
SAMPLING DYNAMICS									
	Aperture delay			40			40		ns
	Aperture jitter			20			20		ps
	Transient response	FS step			5			5	µs
	Overvoltage recovery(8)			750			750		ns
REFERENCE									
	Internal reference voltage	No load	2.48	2.5	2.52	2.48	2.5	2.52	V
	Internal reference source current (must use external buffer)			1			1		µA
	Internal reference drift			8			8		ppm/°C
	External reference voltage range for specified linearity		2.3	2.5	2.7	2.3	2.5	2.7	V
	External reference current drain	External 2.5-V reference			100			100	µA

(1) LSB means *least significant bit*. 1 LSB for the ±10 V input range is 305 µV.
(2) Typical rms noise at worst-case transitions.
(3) As measured with fixed resistors. Adjustable to zero with external potentiometer.
(4) Full-scale error is the worst case of –Full Scale or +Full Scale deviation from ideal first and last code transitions, divided by the full-scale range; includes the effect of offset error. Tested at –40°C to +85°C.
(5) Time delay after the ADS8512 is brought out of Power-Down mode until all internal settling occurs and the analog input is acquired to rated accuracy. A Convert command after this delay yields accurate results.
(6) All specifications in dB are referred to a full-scale input.
(7) Usable bandwidth defined as full-scale input frequency at which Signal-to-(Noise + Distortion) degrades to 60 dB.
(8) Recovers to specified performance after 2 x FS input overvoltage.

Copyright © 2008, Texas Instruments Incorporated

ELECTRICAL CHARACTERISTICS (continued)

At T_A = -40°C to +85°C, f_S = 40 kHz, V_S = 5 V, and using internal reference and fixed resistors, unless otherwise specified.

PARAMETER		TEST CONDITIONS	ADS8512I			ADS8512IB			UNIT
			MIN	TYP	MAX	MIN	TYP	MAX	
DIGITAL INPUTS									
V_{IL}	Low-level input voltage		–0.3		+0.8	–0.3		+0.8	V
V_{IH}	High-level input voltage		2.0		V_S + 0.3	2.0		V_S + 0.3	V
I_{IL}	Low-level input current	V_{IL} = 0 V			±10			±10	µA
I_{IH}	High-level input current	V_{IH} = 5 V			±10			±10	µA
DIGITAL OUTPUTS									
	Data format - Serial								
	Data coding - binary 2s complement								
V_{OL}	Low-level output voltage	I_{SINK} = 1.6 mA			0.4			0.4	V
V_{OH}	High-level output voltage	I_{SOURCE} = 500 µA	4			4			V
	Leakage current	High-Z state, V_{OUT} = 0 V to V_S			±1			±1	µA
	Output capacitance	High-Z state			15			15	pF
DIGITAL TIMING									
	Bus access time	R_L = 3.3 kΩ, C_L = 50 pF			83			83	ns
	Bus relinquish time	R_L = 3.3 kΩ, C_L = 10 pF			83			83	ns
POWER SUPPLIES									
V_S	Analog voltage		4.75	5	5.25	4.75	5	5.25	V
I_{DIG}	Digital current			0.6			0.6		mA
I_{ANA}	Analog current			4.2			4.2		mA
	Power dissipation	V_S = 5 V, f_S = 40 kHz		24	32.5		24	32.5	mW
		PWRD		50			50		µW
TEMPERATURE RANGE									
	Specified performance		–40		+85	–40		+85	°C
	Derated performance		–55		+125	–55		+125	°C
	Storage temperature		–65		+150	–65		+150	°C
θ_{JA}	Thermal resistance	SO-16		46			46		°C/W

Table 1. Input Ranges

ANALOG INPUT RANGE	CONNECT $R1_{IN}$ TO	CONNECT $R2_{IN}$ TO	CONNECT $R3_{IN}$ TO	INPUT IMPEDANCE (kΩ)
±10 V	V_{IN}	BUF	GND	45.7
0.3125V to 2.8125 V	V_{IN}	V_{IN}	V_{IN}	> 10,000
±5 V	GND	BUF	V_{IN}	26.7
0 V to 10 V	BUF	GND	V_{IN}	26.7
0 V to 4 V	BUF	V_{IN}	GND	21.3
±3.33 V	V_{IN}	BUF	V_{IN}	21.3
0.5 V to 4.5 V	GND	V_{IN}	GND	21.3

Copyright © 2008, Texas Instruments Incorporated

PIN CONFIGURATION

DW PACKAGE
SO-16
(TOP VIEW)

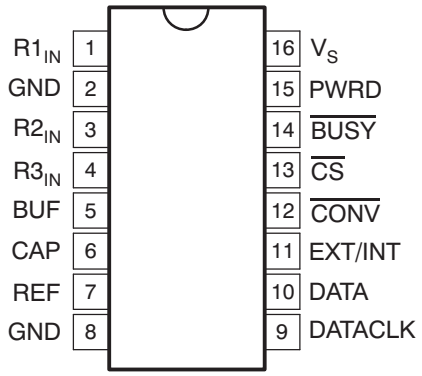

Terminal Functions

TERMINAL		DIGITAL I/O	DESCRIPTION
NAME	NO.		
$R1_{IN}$	1		Analog input. See Table 1 and Table 3.
$R2_{IN}$	3		Analog input. See Table 1 and Table 3.
$R3_{IN}$	4		Analog input. See Table 1 and Table 3.
BUF	5		Reference buffer output. Connect to $R1_{IN}$, $R2_{IN}$, or $R3_{IN}$ as needed.
CAP	6		Reference buffer compensation node. Decouple to ground with a 1-µF tantalum capacitor in parallel with a 0.01-µF ceramic capacitor.
REF	7		Reference input/output. Outputs internal 2.5-V reference via a series 4-kΩ resisitor. Decouple this voltage with a 1-µF to 2.2-µF tantalum capacitor to ground. If an external reference voltage is applied to this pin, it overrides the internal reference.
DATACLK	9	I/O	Data clock pin. With EXT/$\overline{INT}$ low, this pin is an output and provides the synchrnous clock for the serial data. The output is 3-stated when $\overline{CS}$ is high. With EXT/$\overline{INT}$ high, this pin is an input and the serial data clock must be provided externally.
DATA	10	O	Serial data output. The serial data are always the result of the last completed conversion and are synchronized to DATACLK. If DATACLK is from the internal clock (EXT/$\overline{INT}$ low), the serial data are valid on both the rising and falling edges of DATACLK. DATA is 3-stated when $\overline{CS}$ is high.
EXT/$\overline{INT}$	11	I	External/Internal DATACLK pin. Selects the source of the synchronous clock for serial data. if high, the clock must be provided externally. If low, the clock is derived from the internal conversion clock. Note that the clock used to time the conversion is always interna,l regardless of the status of EXT/$\overline{INT}$.
$\overline{CONV}$	12		Convert input. A falling edge on this input puts the internal sample/hold into the hold state and starts a conversion regardless of the state of $\overline{CS}$. If a conversion is already in progress, the falling edge is ignored. If EXT/$\overline{INT}$ is low, data from the previous conversion will be serially transmitted during the current conversion.
$\overline{CS}$	13	I	Chip select. This input 3-states all outputs when high, and enables all outputs when low, including DATA, $\overline{BUSY}$, and DATACLK (when EXT/$\overline{INT}$ is low). Note that a falling edge on $\overline{CONV}$ will initiate a conversion even when $\overline{CS}$ is high.
$\overline{BUSY}$	14	O	Busy output. When a conversion starts, $\overline{BUSY}$ goes low and remains low throughout the conversion. If EXT/$\overline{INT}$ is low, data are serially transmitted while $\overline{BUSY}$ is low. $\overline{BUSY}$ is 3-stated when $\overline{CS}$ is high.
PWRD	15	I	Power down input. When high, the majority of the ADS8512 is placed in a low-power mode, and power consumption is significantly reduced. $\overline{CONV}$ must be taken low before PWRD goes in order to achieve the lowest power consumption. The time required for the ADS8512 to return to normal operation after power down depends on a number of factors. Consult the *Power-Down* section for more information.
GND	2, 8		Ground.
V_S	16		+5-V supply input. For best performance, decouple to ground with a 0.1-µF ceramic capacitor in parallel with a 10-µF tantalum capacitor.

Copyright © 2008, Texas Instruments Incorporated

TYPICAL CHARACTERISTICS

HISTOGRAM

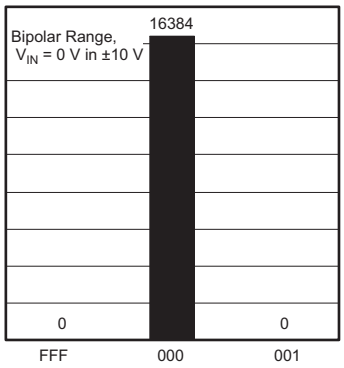

Figure 1.

POWER-SUPPLY CURRENT vs FREE-AIR TEMPERATURE

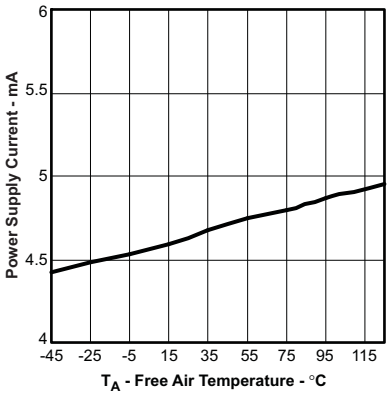

Figure 2.

INTERNAL REFERENCE VOLTAGE vs FREE-AIR TEMPERATURE

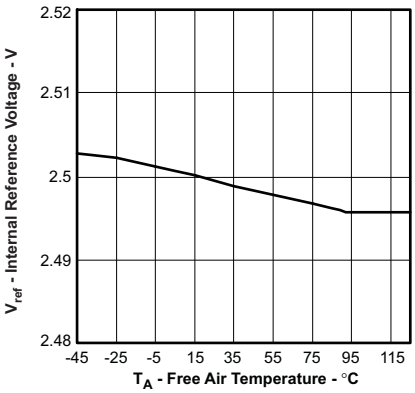

Figure 3.

POWER-SUPPLY CURRENT vs SAMPLING FREQUENCY

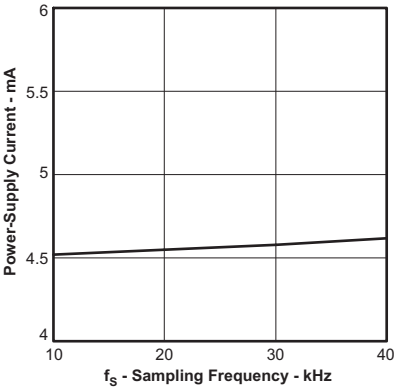

Figure 4.

BIPOLAR OFFSET ERROR vs FREE-AIR TEMPERATURE

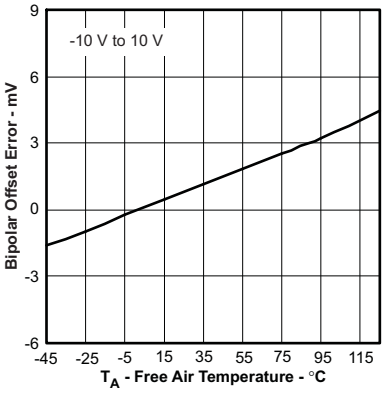

Figure 5.

BIPOLAR POSITIVE FULL-SCALE ERROR vs FREE-AIR TEMPERATURE

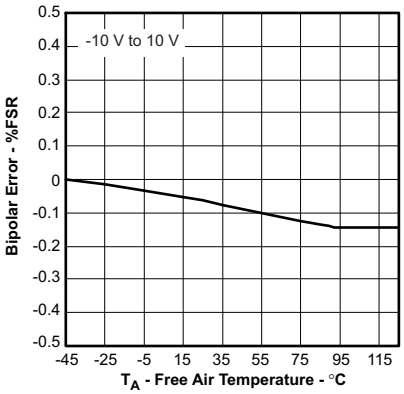

Figure 6.

BIPOLAR NEGATIVE FULL-SCALE ERROR vs FREE-AIR TEMPERATURE

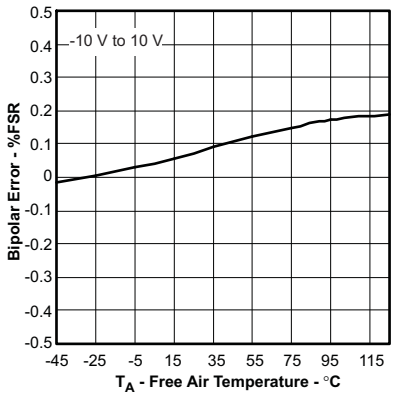

Figure 7.

BIPOLAR OFFSET ERROR vs FREE-AIR TEMPERATURE

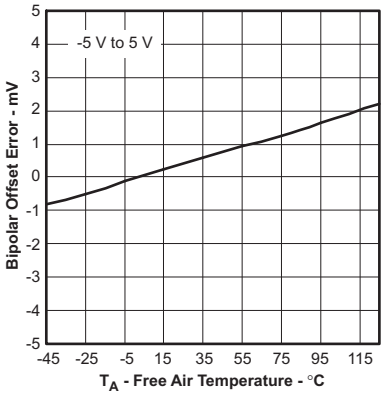

Figure 8.

BIPOLAR POSITIVE FULL-SCALE ERROR vs FREE-AIR TEMPERATURE

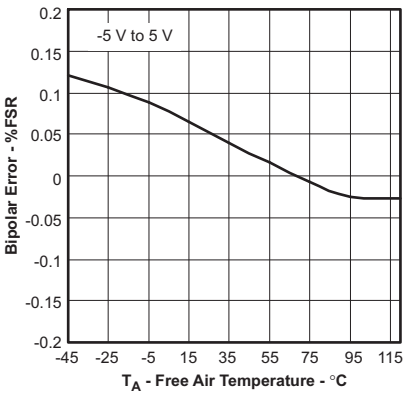

Figure 9.

Copyright © 2008, Texas Instruments Incorporated

TYPICAL CHARACTERISTICS (continued)

BIPOLAR NEGATIVE FULL-SCALE ERROR vs FREE-AIR TEMPERATURE

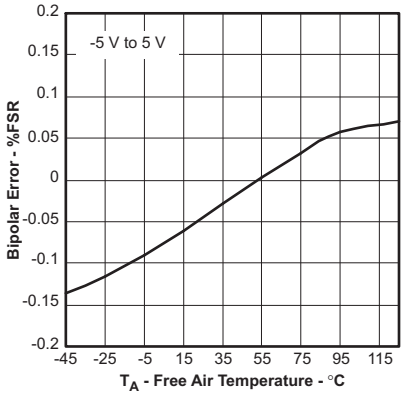

Figure 10.

UNIPOLAR OFFSET ERROR vs FREE-AIR TEMPERATURE

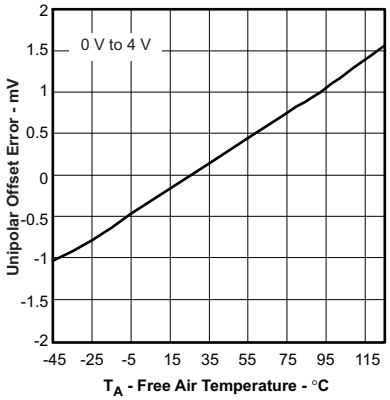

Figure 11.

UNIPOLAR POSITIVE FULL-SCALE ERROR vs FREE-AIR TEMPERATURE

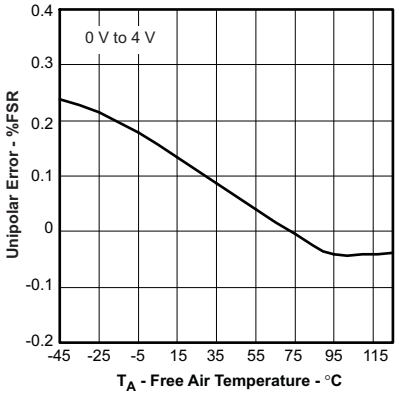

Figure 12.

UNIPOLAR OFFSET ERROR vs FREE-AIR TEMPERATURE

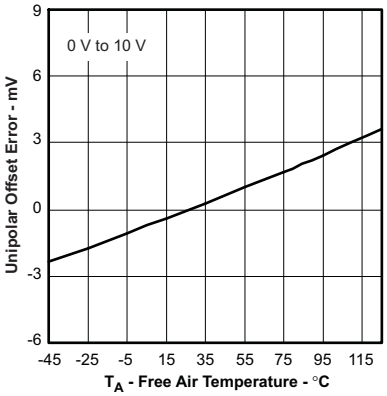

Figure 13.

UNIPOLAR POSITIVE FULL-SCALE ERROR vs FREE-AIR TEMPERATURE

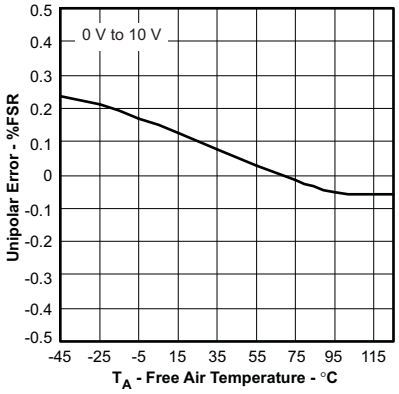

Figure 14.

SPURIOUS FREE DYNAMIC RANGE vs FREE-AIR TEMPERATURE

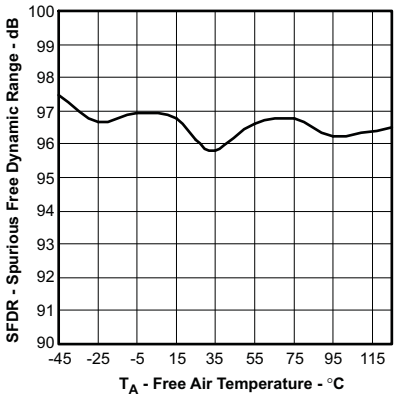

Figure 15.

TOTAL HARMONIC DISTORTION vs FREE-AIR TEMPERATURE

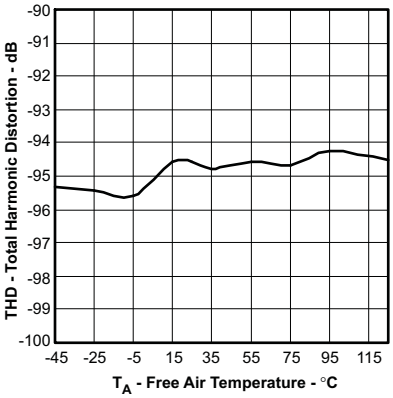

Figure 16.

SIGNAL-TO-NOISE RATIO vs FREE-AIR TEMPERATURE

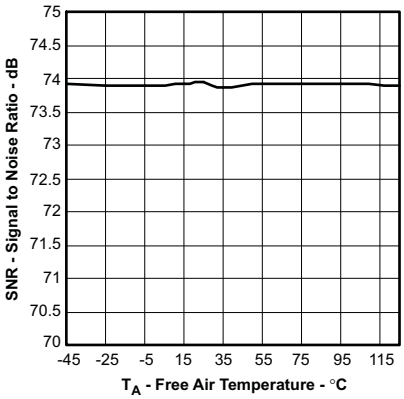

Figure 17.

SIGNAL-TO-NOISE + DISTORTION vs FREE-AIR TEMPERATURE

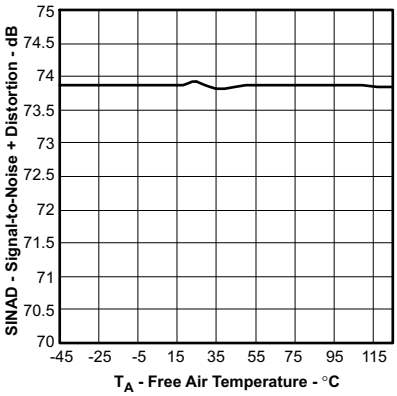

Figure 18.

Copyright © 2008, Texas Instruments Incorporated

TYPICAL CHARACTERISTICS (continued)

SIGNAL-TO-NOISE + DISTORTION vs FREQUENCY

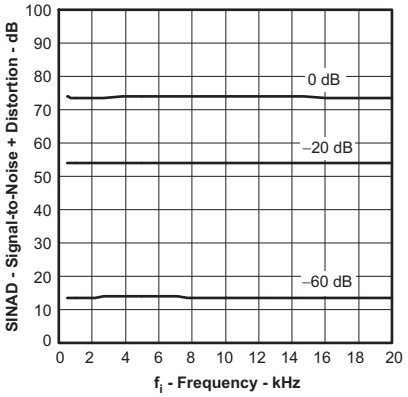

Figure 19.

SIGNAL-TO-NOISE + DISTORTION vs FREE-AIR TEMPERATURE

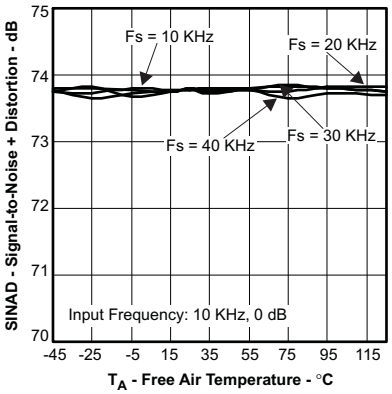

Figure 20.

SIGNAL-TO-NOISE RATIO vs FREQUENCY

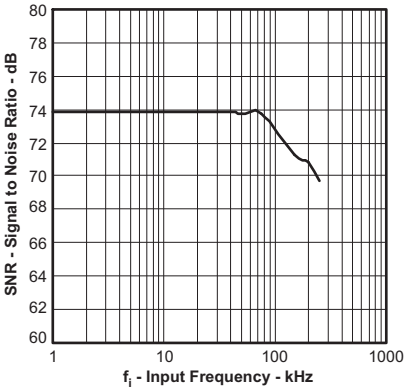

Figure 21.

SIGNAL-TO-NOISE + DISTORTION vs FREQUENCY

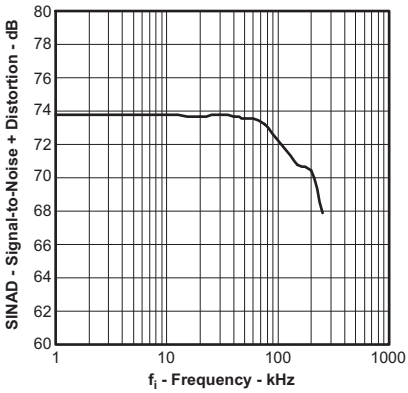

Figure 22.

SPURIOUS FREE DYNAMIC RANGE vs FREQUENCY

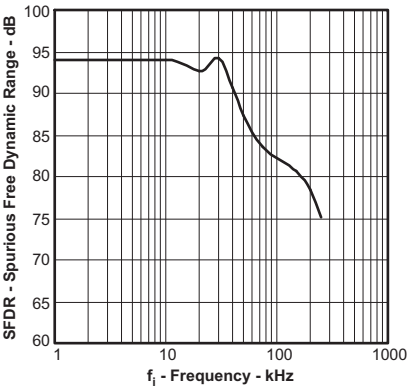

Figure 23.

TOTAL HARMONIC DISTORTION vs FREQUENCY

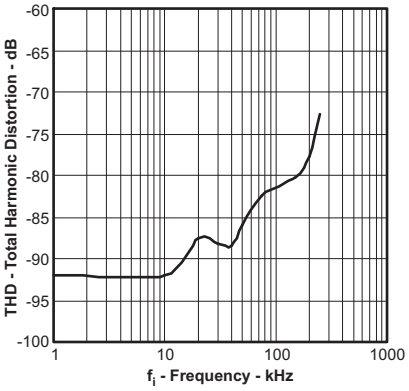

Figure 24.

SPURIOUS FREE DYNAMIC RANGE vs ESR

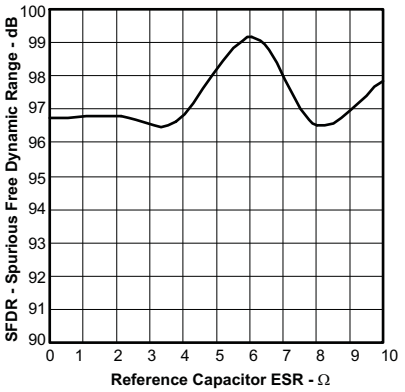

Figure 25.

TOTAL HARMONIC DISTORTION vs ESR

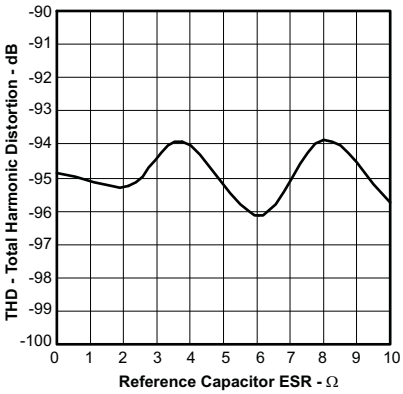

Figure 26.

SIGNAL-TO-NOISE RATIO vs ESR

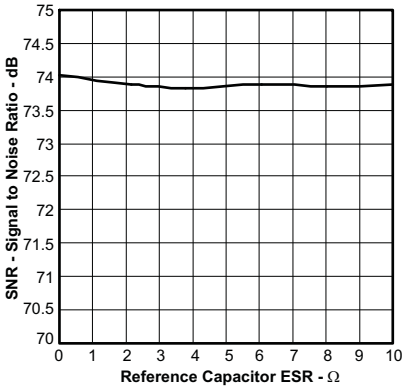

Figure 27.

Copyright © 2008, Texas Instruments Incorporated

TYPICAL CHARACTERISTICS (continued)

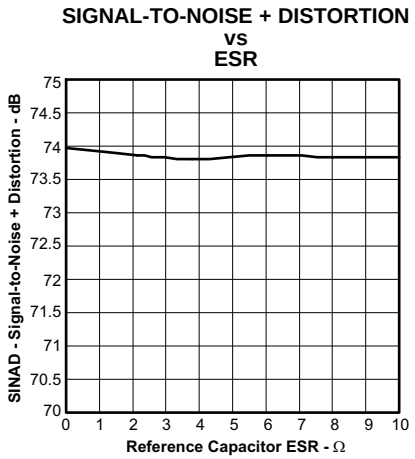

Figure 28.

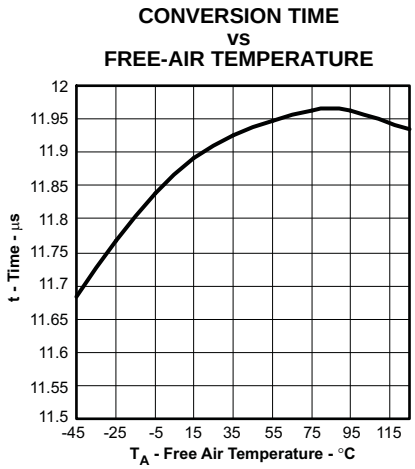

Figure 29.

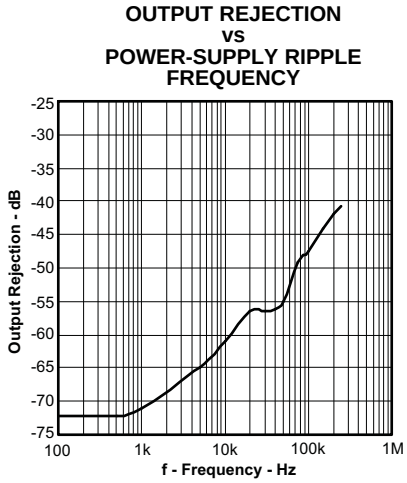

Figure 30.

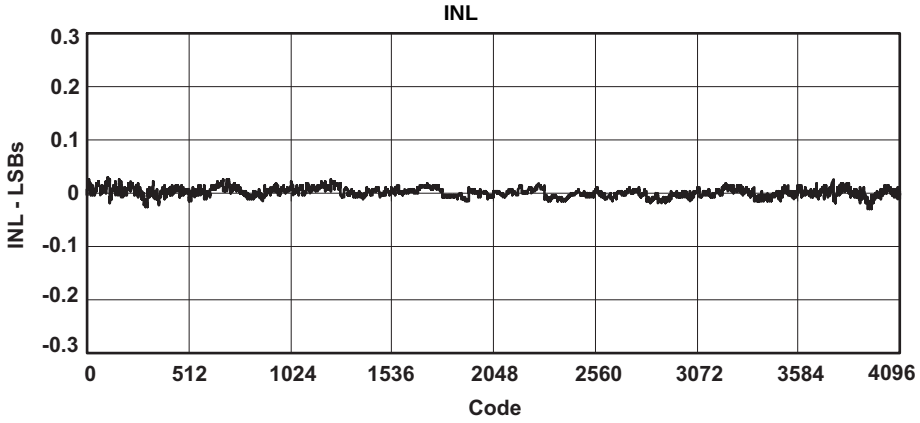

Figure 31.

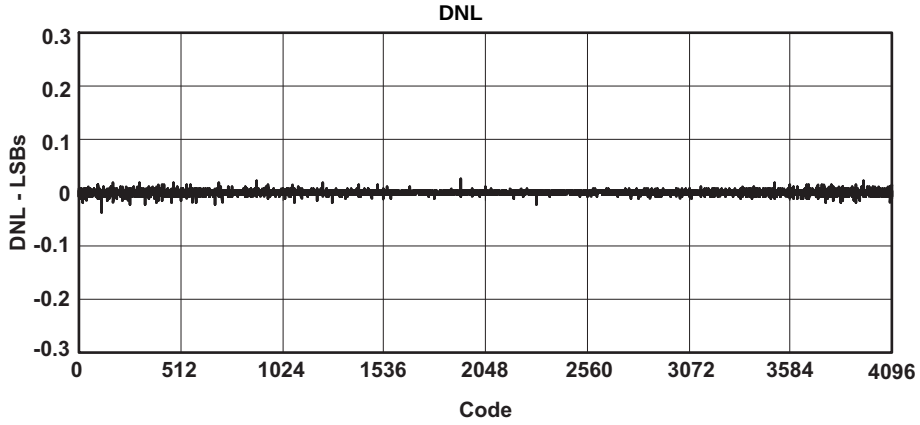

Figure 32.

TYPICAL CHARACTERISTICS (continued)

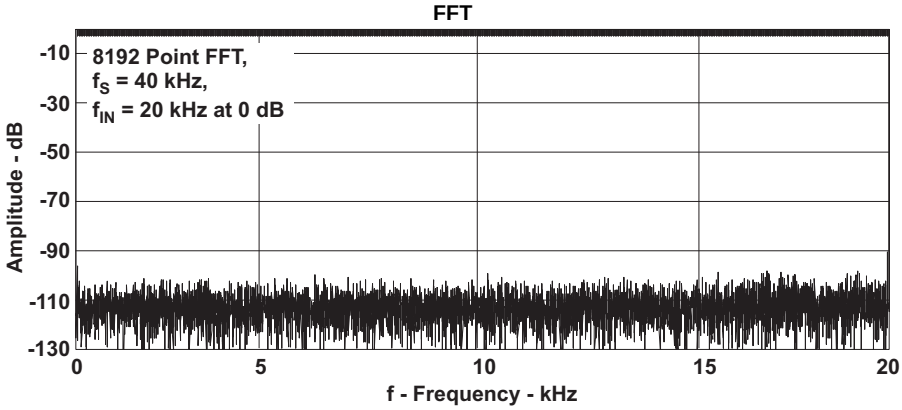

Figure 33.

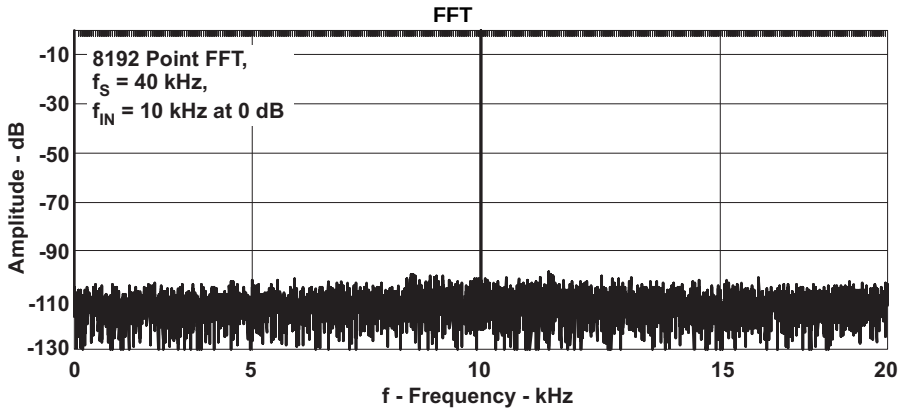

Figure 34.

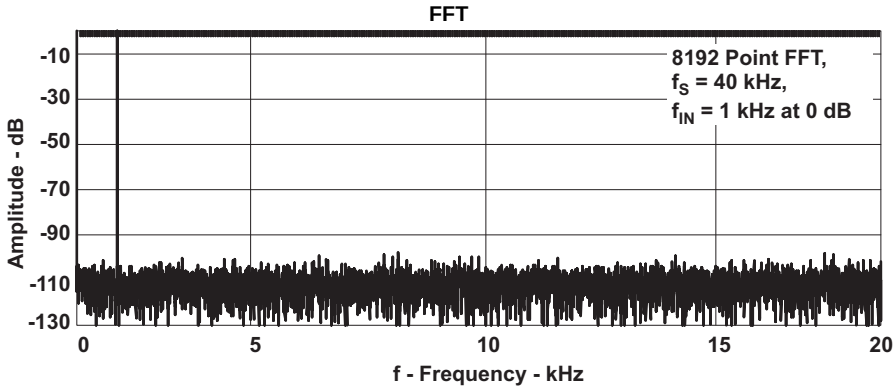

Figure 35.

Copyright © 2008, Texas Instruments Incorporated

BASIC OPERATION

INTERNAL DATACLK

Figure 36 shows a basic circuit to operate the ADS8512 with a ±10-V input range. To begin a conversion and serial transmission of the results from the previous conversion, a falling edge must be provided to the $\overline{CONV}$ input. $\overline{BUSY}$ goes low to indicate that a conversion has started, and stays low until the conversion is complete. During the conversion, the results of the previous conversion are transmitted via DATA while DATACLK provides the synchronous clock for the serial data. The data format is 12-bit, binary twos complement, MSB first. Each data bit is valid on both the rising and falling edge of DATACLK. $\overline{BUSY}$ is low during the entire serial transmission and can be used as a frame synchronization signal.

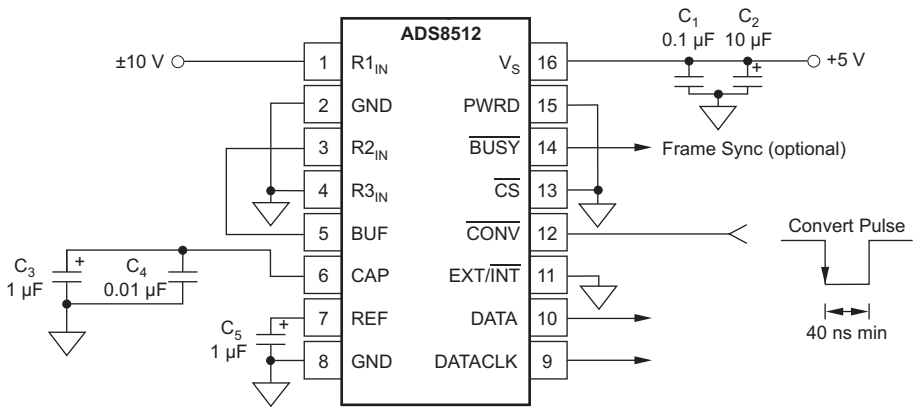

Figure 36. Basic Operating Circuit, ±10-V Input Range, Internal DATACLK

EXTERNAL DATACLK

Figure 37 shows another basic circuit to operate the ADS8512 with a ±10-V input range. To begin a conversion, a falling edge must be provided to the $\overline{CONV}$ input. $\overline{BUSY}$ goes low to indicate that a conversion has started and stays low until the conversion is complete. Just before $\overline{BUSY}$ rises near the end of the conversion, the conversion result held in the internal working register is transferred to the internal shift register.

The internal shift register is clocked via the DATACLK input. The recommended method of reading the conversion result is to provide the serial clock after the conversion has completed. See the *External DATACLK* subsection under the Reading Data section of this data sheet for more information.

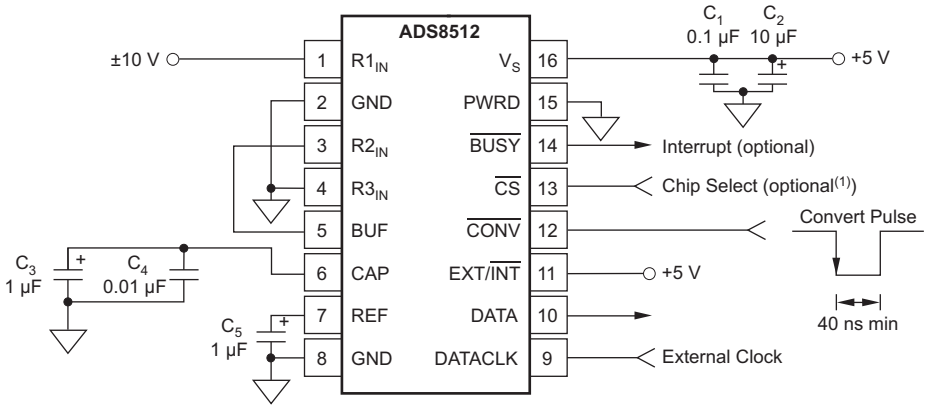

NOTE: (1) Tie $\overline{CS}$ to GND if the outputs will always be active.

Figure 37. Basic Operating Circuit, ±10-V Input Range, External DATACLK

STARTING A CONVERSION

If a conversion is not currently in progress, a falling edge on the $\overline{CONV}$ input places the sample and hold into the hold mode and begins a conversion, as shown in Figure 38 according to the timing shown in Table 2. During the conversion, the $\overline{CONV}$ input is ignored. Starting a conversion does not depend on the state of $\overline{CS}$. A conversion can be started once every 25 µs (40-kHz maximum conversion rate). There is no minimum conversion rate.

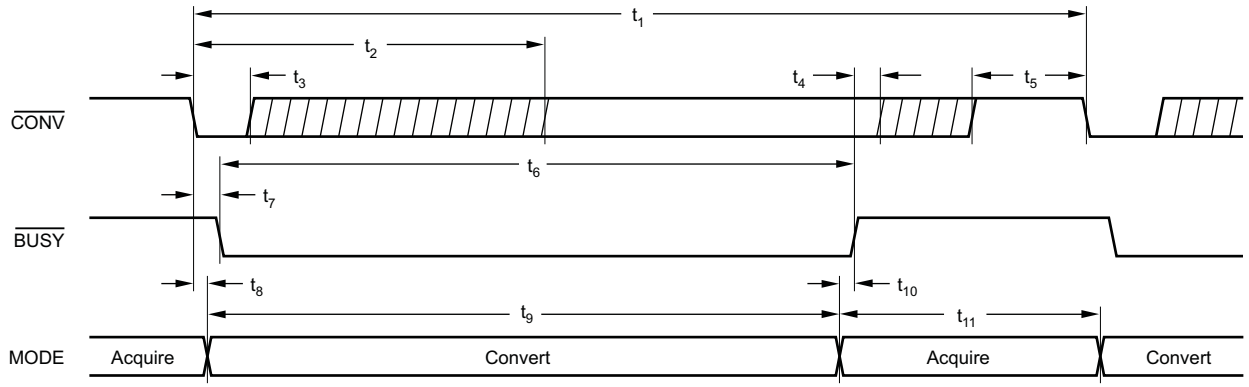

Figure 38. Basic Conversion Timing

Table 2. Conversion and Data Timing, T_A = –40°C to +85°C

SYMBOL	DESCRIPTION	MIN	TYP	MAX	UNIT
t_1	Conversion plus acquisition time			25	µs
t_2	$\overline{CONV}$ low to all digital inputs stable			19	µs
t_3	$\overline{CONV}$ low to initiate a conversion	0.04		12	µs
t_4	$\overline{BUSY}$ rising to any digital input active	5			ns
t_5	$\overline{CONV}$ high before start of conversion ($\overline{CONV}$ high time)	15			ns
t_6	$\overline{BUSY}$ low		12	15	µs
t_7	$\overline{CONV}$ low to $\overline{BUSY}$ low		12	20	ns
t_8	Aperture delay ($\overline{CONV}$ falling edge to actual conversion start)		5		ns
t_9	Conversion time		12	15	µs
t_{10}	Conversion complete to $\overline{BUSY}$ rising		90		ns
t_{11}	Acquisition time			13.5	µs
t_{12}	$\overline{CONV}$ low to rising edge of first internal DATACLK		2		µs
t_{13}	Internal DATACLK high	300	355	425	ns
t_{14}	Internal DATACLK low	300	355	425	ns
t_{15}	Internal DATACLK period	0.6	0.71	0.85	µs
t_{16}	DATA valid to internal DATACLK rising	150	204		ns
t_{17}	Internal DATACLK falling to DATA not valid	150	208		ns
t_{18}	Falling edge of last DATACLK to $\overline{BUSY}$ rising		1.78		µs
t_{19}	External DATACLK rising to DATA not valid	2	12		ns
t_{20}	External DATACLK rising to DATA valid	4	14	20	ns
t_{21}	External DATACLK high	15			ns
t_{22}	External DATACLK low	15			ns
t_{23}	External DATACLK period	35			ns
t_{24}	$\overline{CONV}$ low to external DATACLK active	15			ns
t_{25}	External DATACLK low or $\overline{CS}$ high to $\overline{BUSY}$ rising			5	µs
t_{26}	$\overline{CS}$ low to digital outputs enabled	15			ns
t_{27}	$\overline{CS}$ high to digital outputs disabled	15			ns

Copyright © 2008, Texas Instruments Incorporated

Even though the $\overline{CONV}$ input is ignored while a conversion is in progress, this input should be held static during the conversion period. Transitions on this digital input can easily couple into sensitive analog portions of the converter, adversely affecting the conversion results (see the *Sensitivity to External Digital Signals* section of this data sheet for more information).

Ideally, the $\overline{CONV}$ input should go low and remain low throughout the conversion. It should return high sometime after $\overline{BUSY}$ goes high. In addition, it should be high before the start of the next conversion for a minimum time period given by t_5. This period ensures that the digital transition on the $\overline{CONV}$ input does not affect the signal that is acquired for the next conversion.

An acceptable alternative is to return the $\overline{CONV}$ input high as soon after the start of the conversion as possible. For example, a negative going pulse 100ns wide would make a good $\overline{CONV}$ input signal. It is strongly recommended that from time t_2 after the start of a conversion until $\overline{BUSY}$ rises, the $\overline{CONV}$ input should be held static (either high or low). During this time, the converter is more sensitive to external noise.

READING DATA

The ADS8512 digital output is in binary twos complement (BTC) format. Table 3 shows the relationship between the digital output word and the analog input voltage under ideal conditions.

Table 3. Output Codes and Ideal Input Voltages

DESCRIPTION	ANALOG INPUT		DIGITAL OUTPUT BINARY TWOS COMPLEMENT	
			BINARY CODE	HEX CODE
Full-scale range	±10	0.5 V to 4.5 V		
Least significant bit (LSB)	4.88 mV	0.98 mV		
+Full-Scale (FS - 1LSB)	9.99512 V	4.49902 V	0111 1111 1111	7FF
Midscale	0 V	2.5 V	0000 0000 0000	000
One LSB below midscale	-4.88 mV	2.49902 mV	1111 1111 1111	FFF
-Full-Scale-	-10 V	0.5 V	1000 0000 0000	800

Figure 39 shows the relationship between the various digital inputs, digital outputs, and internal logic of the ADS8512. Figure 40 illustrates when the internal shift register of the ADS8512 is updated and how this relates to a single conversion cycle. Together, these two figures highlight very important aspect of the ADS8512: ***the conversion result is not available until after the conversion is complete***. The implications of this constraint are discussed in the following sections.

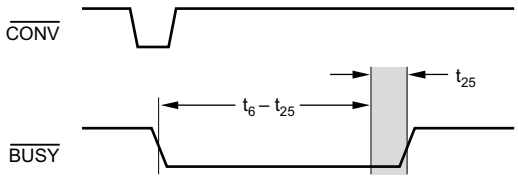

NOTE: Update of the internal shift register occurs in the shaded region. If EXT/INT is HIGH, then DATACLK must be LOW or CS must be HIGH during this time.

Figure 39. Timing of the Shift Register Update

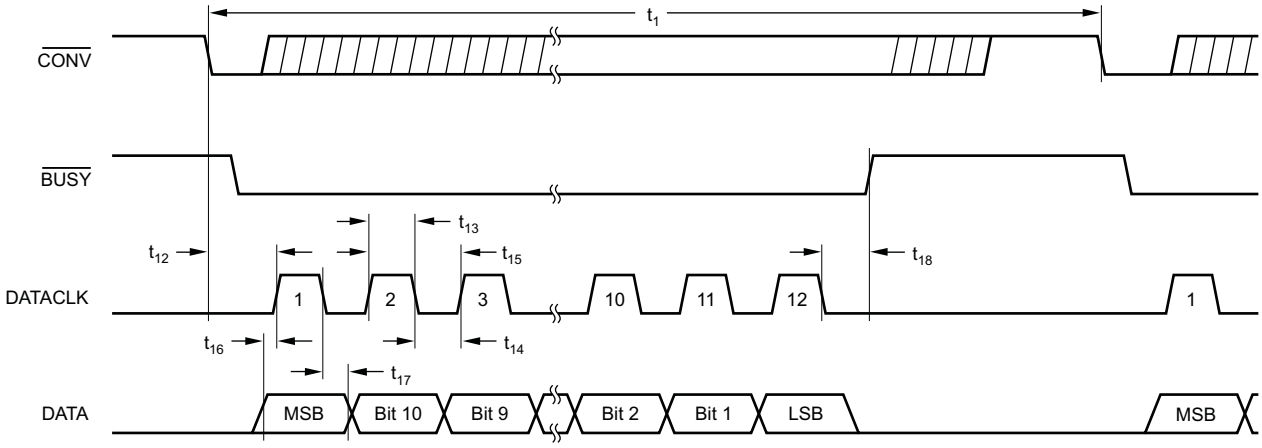

Figure 40. Serial Data Timing, Internal Clock (EXT/INT and CS Low)

Copyright © 2008, Texas Instruments Incorporated

Internal DATACLK

With EXT/$\overline{\text{INT}}$ tied low, the result from conversion *n* is serially transmitted during conversion *n+1*, as shown in Figure 41, with the timing given in Table 2. Serial transmission of data occurs only during a conversion. When a transmission is not in progress, DATA and DATACLK are low.

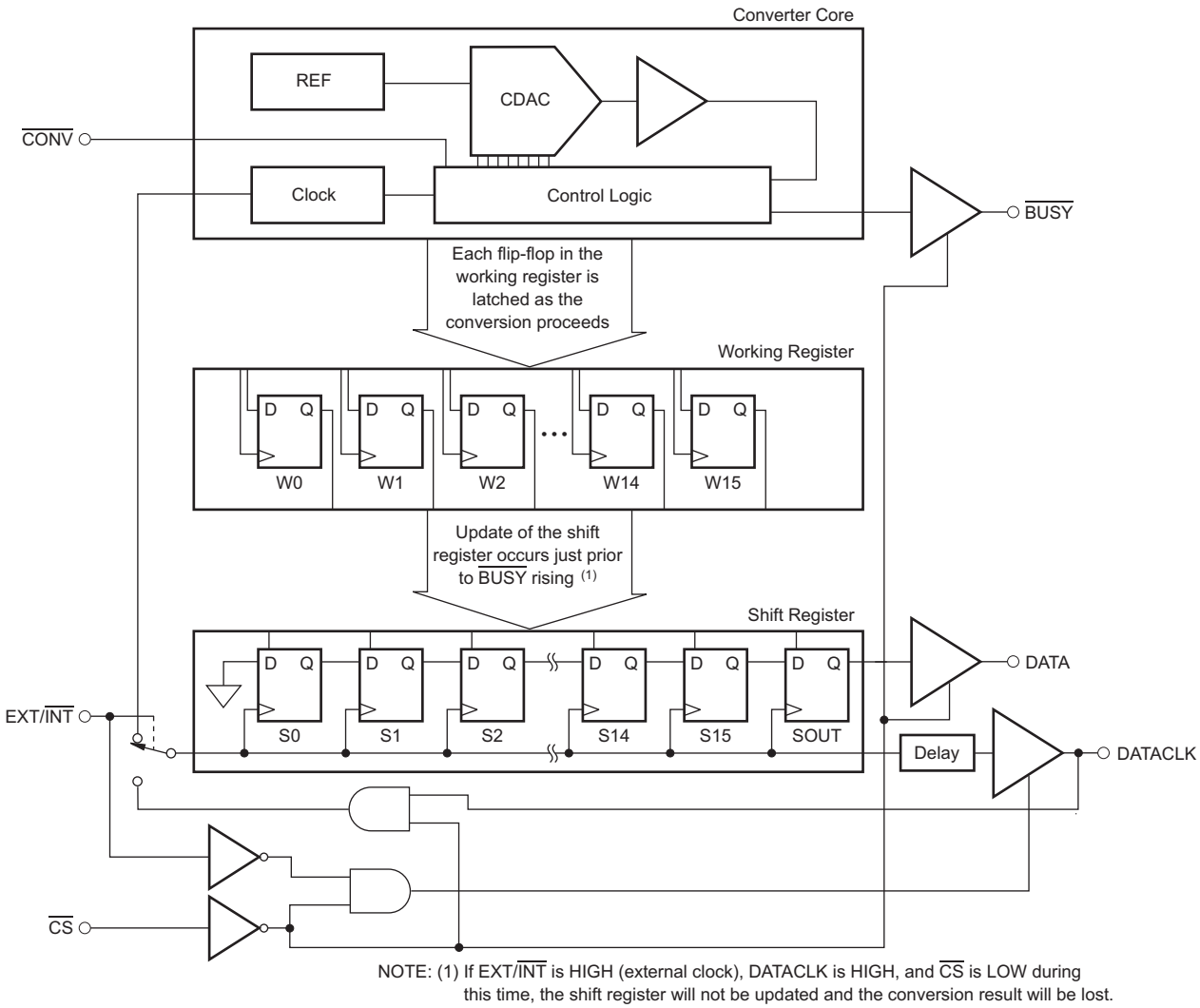

Figure 41. Block Diagram of the ADS8512 Digital Inputs and Outputs

During the conversion, the results of the previous conversion are transmitted via DATA, while DATACLK provides the synchronous clock for the serial data. The data format is 12-bit, binary twos complement, MSB first. Each data bit is valid on both the rising and falling edges of DATACLK. $\overline{\text{BUSY}}$ is low during the entire serial transmission and can be used as a frame synchronization signal.

External DATACLK

With EXT/$\overline{\text{INT}}$ tied high, the result from conversion *n* is clocked out after the conversion has completed, during the next conversion (*n+1*), or a combination of these two. Figure 42 shows the case of reading the conversion result after the conversion is complete. Figure 43 describes reading the result during the next conversion. Figure 44 combines the important aspects of Figure 42 and Figure 43 for reading part of the result after the conversion is complete and the balance during the next conversion.

The serial transmission of the conversion result is initiated by a rising edge on DATACLK. The data format is 12-bit, binary twos complement, MSB first. Each data bit is valid on the falling edge of DATACLK. In some cases, it might be possible to use the rising edge of the DATACLK signal. However, one extra clock period (not shown in Figure 42, Figure 43, and Figure 44) is needed for the final bit.

The external DATACLK signal must be low or $\overline{\text{CS}}$ must be high before $\overline{\text{BUSY}}$ rises (see time t_{25} in Figure 43 and Figure 44). If this limit is not observed during this time, the output shift register of the ADS8512 is not updated with the conversion result. Instead, the previous contents of the shift register remain and the new result is lost.

Before reading the next three paragraphs, consult the *Sensitivity to External Digital Signals* section of this data sheet. That section explains many of the concerns regarding how and when to apply the external DATACLK signal.

External DATACLK Active After the Conversion

The preferred method of obtaining the conversion result is to provide the DATACLK signal after the conversion has been completed and before the next conversion starts, as shown in Figure 42. Note that the DATACLK signal should be static before the start of the next conversion. If this limit is not observed, the DATACLK signal could affect the voltage that is acquired.

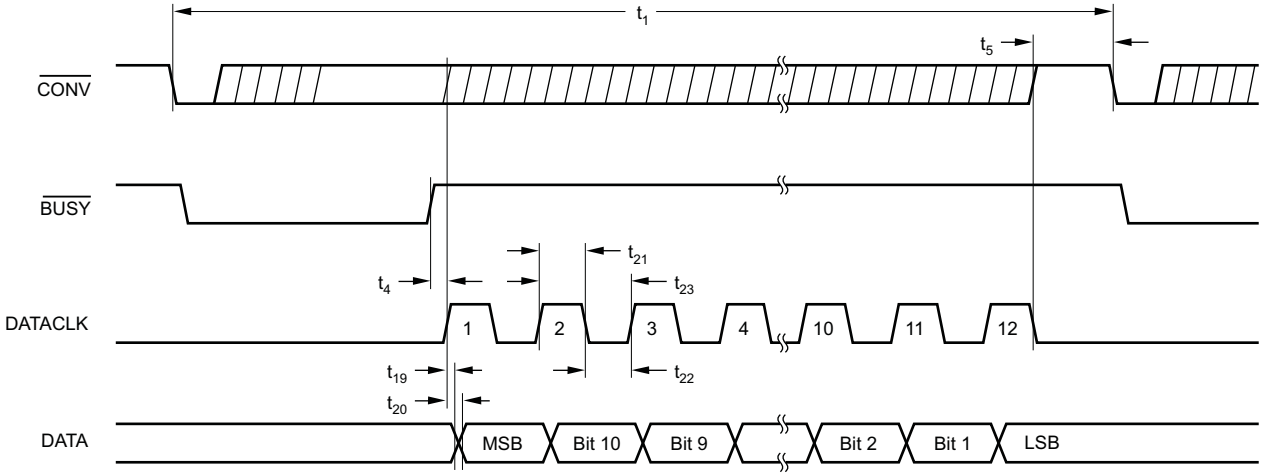

Figure 42. Serial Data Timing, External Clock, Clocking After the Conversion Completes (EXT/$\overline{\text{INT}}$ High, $\overline{\text{CS}}$ Low)

Copyright © 2008, Texas Instruments Incorporated

External DATACLK Active During the Next Conversion

Another method of obtaining the conversion result is shown in Figure 43. Because the output shift register is not updated until the end of the conversion, the previous result remains valid during the next conversion. If a fast clock (≥ 2MHz) can be provided to the ADS8512, the result can be read during time t_2. During this time, the noise from the DATACLK signal is less likely to affect the conversion result.

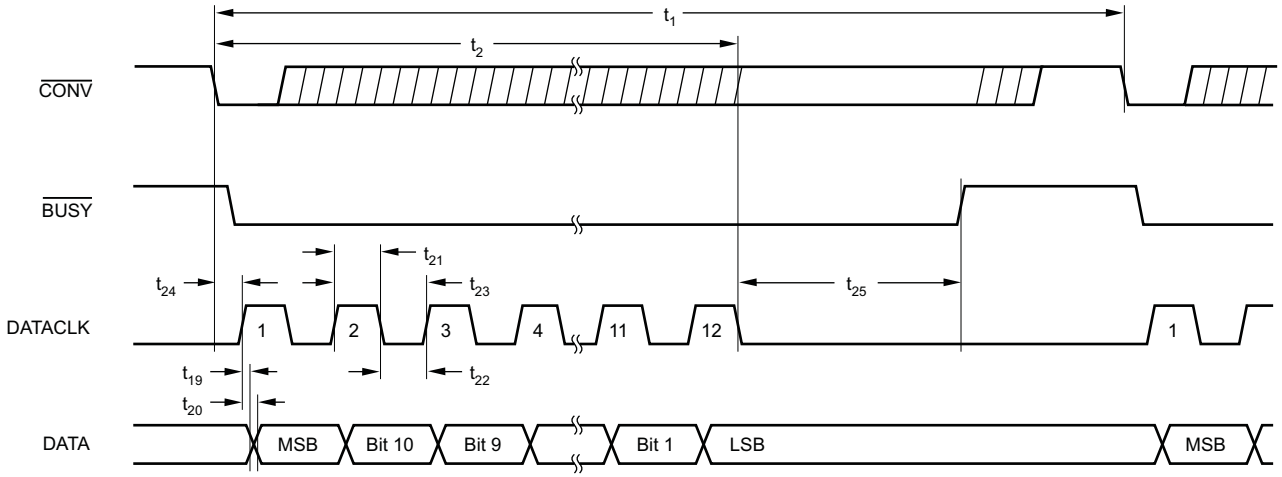

Figure 43. Serial Data Timing, External Clock, Clocking During the Next Conversion (EXT/$\overline{\text{INT}}$ High, $\overline{\text{CS}}$ Low)

External DATACLK Active After the Conversion and During the Next Conversion

Figure 44 shows a method that combines the two previous approaches. This method works very well for microcontrollers that do serial transfers 8 bits at a time and for slower microcontrollers. For example, if the fastest serial clock that the microcontroller can produce is 1 µs, the approach shown in Figure 42 would result in a diminished throughput (26-kHz maximum conversion rate). The method described in Figure 43 could not be used without risk of affecting the conversion result (the clock would have to be active after time t_2). Therefore, the approach in Figure 44 results in an improved throughput rate (33 kHz maximum with a 1-µs clock), and DATACLK is not active after time t_2.

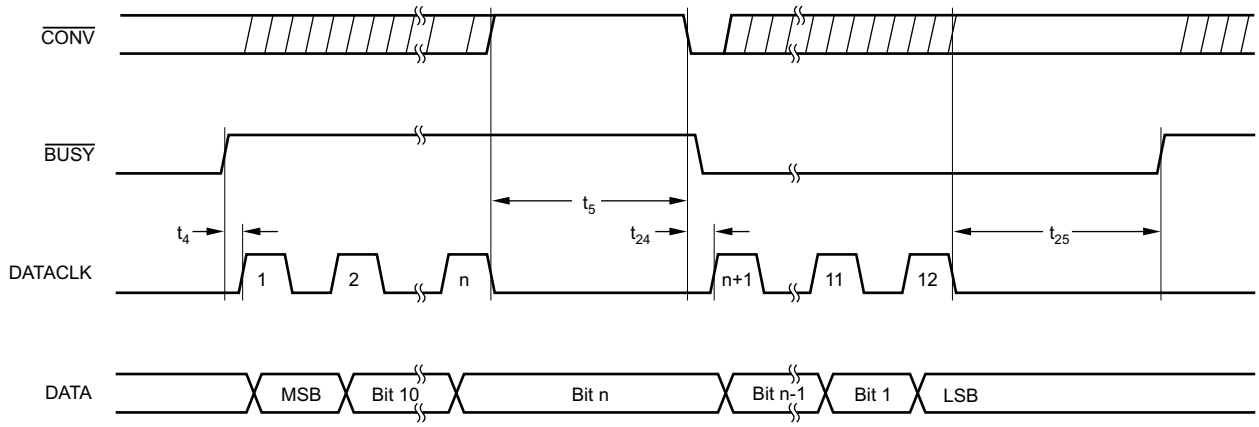

Figure 44. Serial Data Timing, External Clock, Clocking After the Conversion Completes and During the Next Conversion (EXT/$\overline{\text{INT}}$ High, $\overline{\text{CS}}$ Low)

CHIP SELECT

The $\overline{CS}$ input allows the digital outputs of the ADS8512 to be disabled and gates the external DATACLK signal when EXT/$\overline{INT}$ is high. See Figure 45 for the enable and disable time associated with $\overline{CS}$ and Figure 41 for a block diagram of the ADS8512 logic. The digital outputs can be disabled at any time.

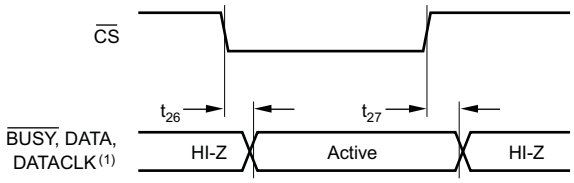

NOTE: (1) DATACLK is an output only when EXT/$\overline{INT}$ is LOW.

Figure 45. Enable and Disable Timing for Digital Outputs

Note that a conversion is initiated on the falling edge of $\overline{CONV}$ even if $\overline{CS}$ is high. If the EXT/$\overline{INT}$ input is low (internal DATACLK) and $\overline{CS}$ is high during the entire conversion, the previous conversion result is lost (that is, the serial transmission occurs but DATA and DATACLK are disabled).

Copyright © 2008, Texas Instruments Incorporated

ANALOG INPUT

The ADS8512 offers a number of input ranges. This set of options is accomplished by connecting the three input resistors to either the analog input (V_{IN}), to ground (GND), or to the 2.5-V reference buffer output (BUF). Table 1 shows the input ranges that are typically used in most data acquisition applications. These ranges are all specified to meet the specifications given in the *Electrical Characteristics* table. Table 4 contains a complete list of ideal input ranges, associated input connections, and comments regarding the range.

Table 4. Complete list of Ideal Input Ranges

ANALOG INPUT RANGE (V)	CONNECT $R1_{IN}$ TO	CONNECT $R2_{IN}$ TO	CONNECT $R3_{IN}$ TO	INPUT IMPEDANCE (kΩ)	COMMENT
0.3125 to 2.8125	V_{IN}	V_{IN}	V_{IN}	> 10,000	Specified offset and gain
–0.417 to 2.916	V_{IN}	V_{IN}	BUF	26.7	V_{IN} cannot go below GND – 0.3V
0.417 to 3.750	V_{IN}	V_{IN}	GND	26.7	Offset and gain not specified
±3.333	V_{IN}	BUF	V_{IN}	21.3	Specified offset and gain
–15 to 5	V_{IN}	BUF	BUF	45.7	Offset and gain not specified
±10	V_{IN}	BUF	GND	45.7	Specified offset and gain
0.833 to 7.5	V_{IN}	GND	V_{IN}	21.3	Offset and gain not specified
–2.5 to 17.5	V_{IN}	GND	BUF	45.7	Offset and gain not specified
2.5 to 22.5	V_{IN}	GND	GND	45.7	Offset and gain not specified
0 to 2.857	BUF	V_{IN}	V_{IN}	45.7	Offset and gain not specified
–1 to 3	BUF	V_{IN}	BUF	21.3	V_{IN} cannot go below GND – 0.3V
0 to 4	BUF	V_{IN}	GND	21.3	Specified offset and gain
–6.25 to 3.75	BUF	BUF	V_{IN}	26.7	Offset and gain not specified
0 to 10	BUF	GND	V_{IN}	26.7	Specified offset and gain
0.357 to 3.214	GND	V_{IN}	V_{IN}	45.7	Offset and gain not specified
–0.5 to 3.5	GND	V_{IN}	BUF	21.3	V_{IN} cannot go below GND – 0.3V
0.5 to 4.5	GND	V_{IN}	GND	21.3	Specified offset and gain
±5	GND	BUF	V_{IN}	26.7	Specified offset and gain
1.25 to 11.25	GND	GND	V_{IN}	26.7	Offset and gain not specified

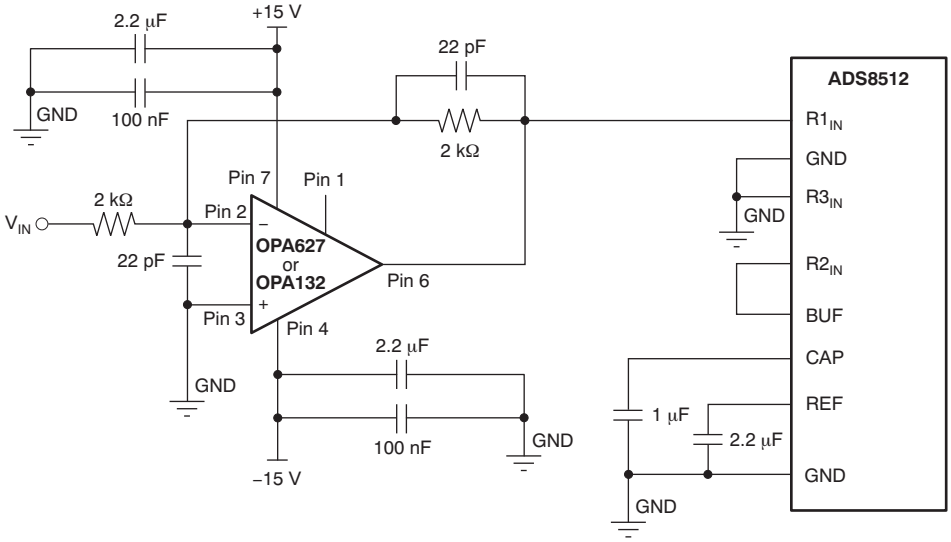

Figure 46. Typical Driving Circuit (±10 V, No Trim)

The input impedance results from the various connections and the internal resistor values (refer to the block diagram on the front page of this data sheet). The internal resistor values are typical and can change by ±30% as a result of process variations. However, the ratio matching of the resistors is considerably better than this range. Thus, the input range only varies a few tenths of a percent from part to part, while the input impedance can vary up to ±30%.

The *Electrical Characteristics* table contains the maximum limits for the variation of the analog input range, but only for those ranges where the comment field shows that the offset and gain are specified (including all the ranges listed in Table 1). For the other ranges, the offset and gain are not tested and are not specified.

Three of the input ranges in Table 4 are not recommended for general use. These input ranges involve the connection at $R2_{IN}$ being driven below GND. This input has a reverse-biased ESD protection diode connection to ground. If $R2_{IN}$ is taken below GND – 0.3V, this diode will be forward-biased and will clamp the negative input at –0.4V to –0.7V, depending on the temperature. Since the negative full-scale value of these input ranges exceed –0.4V, they are not recommended.

Note that Table 4 assumes that the voltage at the REF pin is +2.5V. This assumption is true if the internal reference is being used or if the external reference is +2.5V. Other reference voltages change the values inTable 4.

HIGH IMPEDANCE MODE

When $R1_{IN}$, $R2_{IN}$, and $R3_{IN}$ are connected to the analog input, the input range of the ADS8512 is 0.3125 V to 2.8125 V and the input impedance is greater than 10 MΩ. This input range can be used to connect the ADS8512 directly to a wide variety of sensors. Figure 47 shows the impedance of the sensor versus the change in INL and DNL of the ADS8512. The performance of the ADS8512 can be improved for higher sensor impedance by allowing more time for acquisition. For example, 10 µs of acquisition time approximately doubles sensor impedance for the same INL/DNL performance.

The input impedance and capacitance of the ADS8512 are very stable over temperature. Assuming that this performance is true of the sensor as well, the graph shown in Figure 47 will vary less than a few percent over the ensured temperature range of the ADS8512. If the sensor impedance varies significantly with temperature, the worst-case impedance should be used.

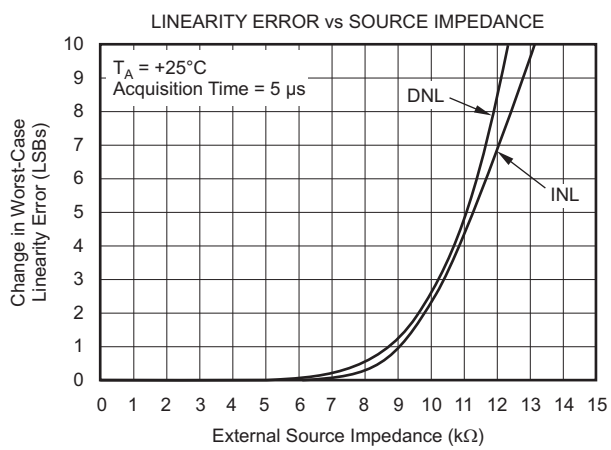

Figure 47. Linearity Error vs Source Impedance in High Impedance Mode ($R1_{IN}$ = $R2_{IN}$ = $R3_{IN}$ = V_{IN})

Copyright © 2008, Texas Instruments Incorporated

DRIVING THE ADS8512 ANALOG INPUT

In general, any reasonably fast, high-quality operational or instrumentation amplifier can be used to drive the ADS8512 input. When the converter enters the acquisition mode, there is some charge injection from the converter input to the amplifier output. This charge injection can result in inadequate settling time with slower amplifiers. Be very careful with single-supply amplifiers, particularly if their output is required to swing very close to the supply rails.

In addition, be careful with regard to the amplifier linearity. The outputs of single-supply and rail-to-rail amplifiers can saturate as the outputs approach the supply rails. Rather than the amplifier transfer function being a straight line, the curve can become severely *S*-shaped. Also, watch for the point where the amplifier switches from sourcing current to sinking current. For some amplifiers, the transfer function can be noticeably discontinuous at this point, causing a significant change in the output voltage for a much smaller change on the input.

Texas Instruments manufactures a wide variety of operational and instrumentation amplifiers that can be used to drive the input of the ADS8512. These include the OPA627, OPA132, and INA110.

Copyright © 2008, Texas Instruments Incorporated

REFERENCE

The ADS8512 can be operated with its internal 2.5-V reference or an external reference. By applying an external reference voltage to the REF pin, the internal reference voltage is overdriven. The voltage at the REF input is internally buffered by a unity gain buffer. The output of this buffer is present at the BUF and CAP pins.

REF

The REF pin is the output of the internal 2.5-V reference or the input for an external reference. A 1-µF to 2.2-µF tantulum capacitor should be connected between this pin and ground. The capacitor should be placed as close to the ADS8512 as possible.

When using the internal reference, the REF pin should not be connected to any type of significant load. An external load will cause a voltage drop across the internal 4-kΩ resistor that is in series with the internal reference. Even a 40-MΩ external load to ground will cause a decrease in the full-scale range of the converter by 6 LSBs.

The range for the external reference is 2.3 V to 2.7 V. The voltage on REF determines the full-scale range of the converter and the corresponding LSB size. Increasing the reference voltage increases the LSB size in relation to the internal noise sources which, in turn, can improve signal-to-noise ratio. Likewise, decreasing the reference voltage reduces the LSB size and signal-to-noise ratio.

CAP

The CAP pin is used to compensate the internal reference buffer. A 1-µF tantalum capacitor in parallel with a 0.01-µF ceramic capacitor should be connected between this pin and ground, with the ceramic capacitor placed as close to the ADS8512 as possible. The total value of the capacitance on the CAP pin is critical to optimum performance of the ADS8512. A value larger than 2.0 µF could overcompensate the buffer while a value lower than 0.5 µF may not provide adequate compensation. The equivalent series resistance (ESR) of these compensation capacitors is also critical. Keep the total ESR under 3 Ω. See Figure 25 through Figure 28 for how the worst-case INL is affected by ESR.

BUF

The voltage on the BUF pin is the output of the internal reference buffer. This pin is used to provide +2.5 V to the analog input or inputs for the various input configurations. The BUF output can provide up to 1 mA of current to an external load. The load should be constant because a variable load could affect the conversion result by modulating the BUF voltage. Also note that the BUF output shows significant glitches as each bit decision is made during a conversion. Between conversions, the BUF output is quiet.

 Copyright © 2008, Texas Instruments Incorporated

POWER DOWN

The ADS8512 has a power-down mode that is activated by taking $\overline{CONV}$ low and then PWRD high. This mode will power down all of the analog circuitry including the reference, reducing power dissipation to under 50 µW. To exit the power-down mode, $\overline{CONV}$ is taken high and then PWRD is taken low. Note that a conversion is initiated if PWRD is taken high while $\overline{CONV}$ is low.

While in the power-down mode, the voltage on the capacitors connected to CAP and REF begins to leak off. The voltage on the CAP capacitor leaks off much more rapidly than on the REF capacitor (the REF input of the ADS8512 becomes high-impedance when PWRD is high—this is not true for the CAP input). When exiting power-down mode, these capacitors must be allowed to recharge and settle to a 12-bit level. Figure 48 shows the amount of time typically required to obtain a valid 12-bit result based on the amount of time spent in power down (at room temperature). This figure assumes that the total capacitance on the CAP pin is 1.01 µF.

Figure 49 shows a circuit that can significantly reduce the power-up time if the power down time is fairly brief (a few seconds or less). A low on-resistance MOSFET is used to disconnect the capacitance on the CAP pin from the leakage paths internal to the ADS8512. This disconnection allows the capacitors to retain the respecetive charges for a much longer period of time, reducing the time required to recharge them at power-up. With this circuit, the power-down time can be extended to tens or hundreds of milliseconds with almost instantaneous power-up.

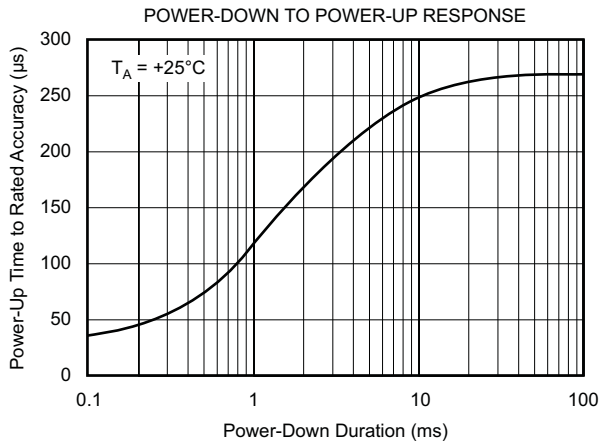

Figure 48. Power-Down to Power-Up Response

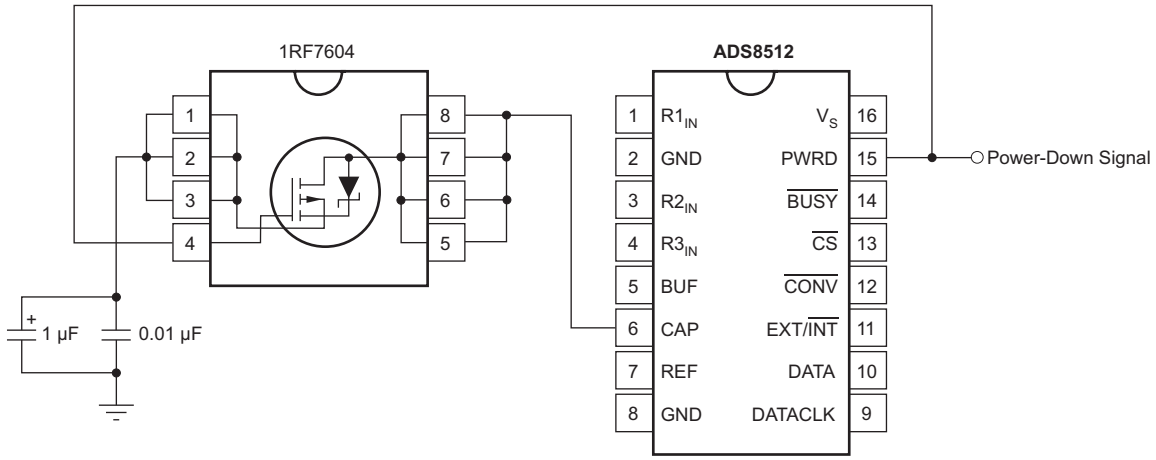

Figure 49. Improved Power-Up Response Circuit

LAYOUT

POWER FOR SO-16 PACKAGE

For optimum performance, tie the analog and digital power pins to the same +5-V power supply and tie the analog and digital grounds together. As noted in the Electrical Characteristics table, the ADS8512 uses 90% of its power for the analog circuitry. The ADS8512 should be considered as an analog component.

The +5-V power for the A/D converter should be separate from the +5 V used for the system digital logic. Connecting $+V_S$ directly to a digital supply can reduce converter performance due to switching noise from the digital logic. For best performance, the +5-V supply can be produced from whatever analog supply is used for the rest of the analog signal conditioning. If +12-V or +15-V supplies are present, a simple +5-V regulator can be used. Although it is not suggested, if the digital supply must be used to power the converter, be sure to properly filter the supply. Either using a filtered digital supply or a regulated analog supply, V_S should be tied to the same +5-V source.

GROUNDING

All the ground pins of the A/D converter should be tied to an analog ground plane (separated from the system digital logic ground) to achieve optimum performance. Both analog and digital ground planes should be tied to the *system* ground as close to the power supplies as possible. This layout helps to prevent dynamic digital ground currents from modulating the analog ground through a common impedance to power ground.

SIGNAL CONDITIONING

The FET switches used for the sample-and-hold on many CMOS A/D converters release a significant amount of charge injection that can cause the driving op amp to oscillate. The amount of charge injection due to the sampling FET switch on the ADS8512 is approximately 5% to 10% of the amount on similar A/D converters with the charge redistribution digital-to-analog converter (DAC) CDAC architecture. There is also a resistive front-end that attenuates any released charge. The end result is a minimal requirement for the drive capability on the signal conditioning preceding the A/D converter. Any op amp sufficient for the signal in an application is sufficient to drive the ADS8512.

The resistive front-end of the ADS8512 also provides a specified ±25-V overvoltage protection. In most cases, this architecture eliminates the need for external over-voltage protection circuitry.

SENSITIVITY TO EXTERNAL DIGITAL SIGNALS

All successive approximation register-based A/D converters are sensitive to external sources of noise. For the ADS8512 and similar A/D converters, this noise most often originates because of the transition of external digital signals. While digital signals that run near the converter can be the source of the noise, the biggest problem occurs with the digital inputs to the converter itself.

In many cases, the system designer may not be aware that there is a problem or a potential for a problem. For a 12-bit system, these problems typically occur at the least significant bits and only at certain places in the converter transfer function. For a 12-bit converter, the problem can be much easier to spot.

For example, the timing diagram in Figure 38 shows that the $\overline{CONV}$ signal should return high sometime during time t_2. In fact, the $\overline{CONV}$ signal can return high at any time during the conversion. However, after time t_2, the transition of the $\overline{CONV}$ signal has the potential of creating a good deal of noise on the ADS8512 die. If this transition occurs at just precisely the wrong time, the conversion results could be affected. In a similar manner, transitions on the DATACLK input could affect the conversion result.

For the ADS8512, there are 12 separate bit decisions that are made during the conversion. The most significant bit decision is made first, proceeding to the least significant bit at the end of the conversion. Each bit decision involves the assumption that the bit being tested should be set. This action is combined with the result that has been achieved so far. The converter compares this combined result with the actual input voltage. If the combined result is too high, the bit is cleared. If the result is equal to or lower than the actual input voltage, the bit remains high. This effect is why the basic architecture is referred to as a *successive approximation register* (SAR).

 Copyright © 2008, Texas Instruments Incorporated

If the result so far is getting very close to the actual input voltage, then the comparison involves two voltages that are very close together. The ADS8512 has been designed so that the internal noise sources are at a minimum just before the comparator result is latched. However, if an external digital signal transitions at this time, a great deal of noise will be coupled into the sensitive analog section of the ADS8512. Even if this noise produces a difference between the two voltages of only 2 mV, the conversion result will be off by 52 counts or least significant bits (LSBs). (The internal LSB size of the ADS8512 is 38 µV, regardless of the input range.)

Once a digital transition has caused the comparator to make a wrong bit decision, the decision cannot be corrected (unless some type of error correction is employed). All subsequent bit decisions will then be wrong. Figure 50 shows a successive approximation process that has gone wrong. The dashed line represents what the correct bit decisions should have been. The solid line represents the actual result of the conversion.

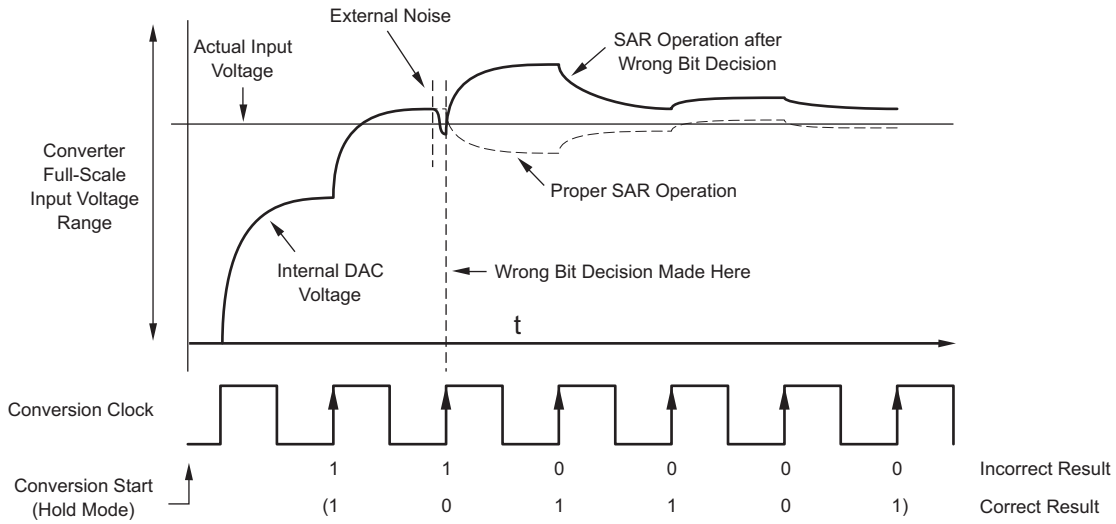

Figure 50. SAR Operation When External Noise Affects the Conversion

Keep in mind that the time period when the comparator is most sensitive to noise is fairly small. Also, the peak portion of the noise event produced by a digital transition is fairly brief, because most digital signals transition in a few nanoseconds. The subsequent noise may last for a period of time longer than this and may induce further effects that require a longer settling time. However, in general, the event is over within a few tens of nanoseconds.

For the ADS8512, error correction is done when the tenth bit is decided. During this bit decision, it is possible to correct limited errors that may have occurred during previous bit decisions. However, after the tenth bit, no such correction is possible. Note that for the timing diagrams shown in Figure 38, Figure 40, Figure 42, Figure 43, and Figure 44 all external digital signals should remain static from 8 µs after the start of a conversion until $\overline{\text{BUSY}}$ rises. The tenth bit is decided approximately 10 µs to 11 µs into the conversion.

APPLICATION INFORMATION

AVERAGING

Converter noise can be compensated by averaging the digital codes. By averaging conversion results, transition noise is reduced by a factor of $1/\sqrt{Hz}$ where *n* is the number of averages. For example, averaging four conversion results reduces the transition noise (TN) by 1/2 to 0.4 LSBs. Averaging should only be used for input signals with frequencies near dc.

For ac signals, a digital filter can be used to low-pass filter and decimate the output codes. This action works in a similar manner to averaging: for every decimation by 2, the signal-to-noise ratio improves 3 dB.

ADS8512 AS AN SPI MASTER DEVICE (INT/$\overline{\text{EXT}}$ TIED LOW)

Figure 51 shows a simple interface between the ADS8512 and an SPI-equipped microcontroller or TMS320 series digital signal processor (DSP) when using the internal serial data clock. This interface assumes that the microcontroller or DSP is configured as an SPI slave, is capable of receiving 12-bit transfers, and that the ADS8512 is the only serial peripheral on the SPI bus.

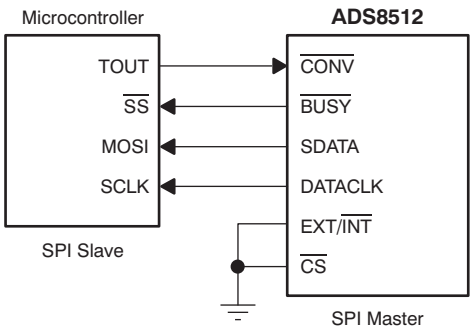

NOTE: CPOL = 0 (inactive SCLK is LOW)
CPHA = 0 or 1 (data valid on either SCLK edge)

Figure 51. ADS8512 as SPI Master

To maintain synchronization with the ADS8512, the microcontroller slave select ($\overline{\text{SS}}$) input should be connected to the $\overline{\text{BUSY}}$ output of the ADS8512. When a transition from high-to-low occurs on $\overline{\text{BUSY}}$ (indicating the current conversion is in process), the ADS8512 internal SCLK begins shifting the previous conversion data into the MOSI pin of the microcontroller. In this scenario, the $\overline{\text{CONV}}$ input to the ADS8512 can be controlled from an external trigger source, or a trigger generated by the microcontroller. The ADS8512 internal SCLK provides 150ns (min) of setup and hold timing on the SDATA output, allowing the microcontroller to sample data on either the rising or falling edge of SCLK.

Copyright © 2008, Texas Instruments Incorporated

ADS8512 AS AN SPI SLAVE DEVICE (INT/$\overline{\text{EXT}}$ TIED HIGH)

Figure 52 shows another interface between the ADS8512 and an SPI-equipped microcontroller or DSP in which the host processor acts as an SPI master device.

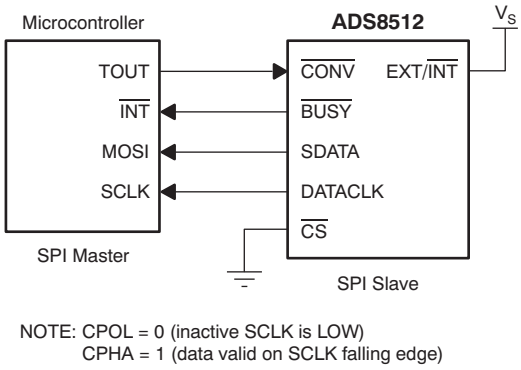

Figure 52. ADS8512 as SPI Slave

In this configuration, the data transfer from the ADS8512 is triggered by the rising edge of the serial data clock provided by the SPI master. The SPI interface should be configured to read valid SDATA on the falling edge of SCLK. As noted in the *EXTERNAL DATACLK* section of this datasheet, when a minimum of 13 SCLKs are provided to the ADS8512, data can be strobed to the host processor on the rising SCLK edge providing a 2ns (min) hold time.

When using an external interrupt to facilitate serial data transfers, as shown in Figure 52, there are two options for the configuration of the interrupt service routine (ISR): falling-edge-triggered or rising-edge-triggered.

A falling-edge-triggered transfer would initiate an SPI transfer after the falling edge of $\overline{\text{BUSY}}$, providing the host controller with the previous conversion results, while the current conversion cycle is underway. The timing for this type of interface is described in detail in Figure 43. Care must be taken to ensure the entire 12-bit conversion result is retrieved from the ADS8512 before $\overline{\text{BUSY}}$ returns high to avoid the potential corruption of the current conversion cycle (consult the *Sensitivity to External Digital Signals* section of this data sheet).

A rising-edge-triggered transfer is the preferred method of obtaining the conversion results. This timing is depicted in Figure 42. This method of obtaining data ensures that SCLK is static during the conversion cycle and provides the host processor with current cycle conversion results.

8-BIT SPI INTERFACE

For microcontrollers that only support 8-bit SPI transfers, it is recommended to configure the ADS8512 for SPI slave operation, as depicted in Figure 52. With the microcontroller configured as the SPI master, two 8-bit transfers are required to obtain full 12-bit conversion results from the ADS8512. The eight MSBs of the conversion result are considered valid on the falling SCLK edges of the first transfer, with the remaining four LSBs being valid on the first four falling SCLK edges in the second transfer.

Copyright © 2008, Texas Instruments Incorporated

PACKAGING INFORMATION

Orderable Device	Status (1)	Package Type	Package Drawing	Pins	Package Qty	Eco Plan (2)	Lead/Ball Finish (6)	MSL Peak Temp (3)	Op Temp (°C)	Device Marking (4/5)	Samples
ADS8512IBDW	ACTIVE	SOIC	DW	16	40	Green (RoHS & no Sb/Br)	NIPDAU	Level-2-260C-1 YEAR	-40 to 85	ADS8512I B	Samples
ADS8512IDW	NRND	SOIC	DW	16	40	Green (RoHS & no Sb/Br)	NIPDAU	Level-2-260C-1 YEAR	-40 to 85	ADS8512I	

(1) The marketing status values are defined as follows:
ACTIVE: Product device recommended for new designs.
LIFEBUY: TI has announced that the device will be discontinued, and a lifetime-buy period is in effect.
NRND: Not recommended for new designs. Device is in production to support existing customers, but TI does not recommend using this part in a new design.
PREVIEW: Device has been announced but is not in production. Samples may or may not be available.
OBSOLETE: TI has discontinued the production of the device.

(2) **RoHS:** TI defines "RoHS" to mean semiconductor products that are compliant with the current EU RoHS requirements for all 10 RoHS substances, including the requirement that RoHS substance do not exceed 0.1% by weight in homogeneous materials. Where designed to be soldered at high temperatures, "RoHS" products are suitable for use in specified lead-free processes. TI may reference these types of products as "Pb-Free".
RoHS Exempt: TI defines "RoHS Exempt" to mean products that contain lead but are compliant with EU RoHS pursuant to a specific EU RoHS exemption.
Green: TI defines "Green" to mean the content of Chlorine (Cl) and Bromine (Br) based flame retardants meet JS709B low halogen requirements of <=1000ppm threshold. Antimony trioxide based flame retardants must also meet the <=1000ppm threshold requirement.

(3) MSL, Peak Temp. - The Moisture Sensitivity Level rating according to the JEDEC industry standard classifications, and peak solder temperature.

(4) There may be additional marking, which relates to the logo, the lot trace code information, or the environmental category on the device.

(5) Multiple Device Markings will be inside parentheses. Only one Device Marking contained in parentheses and separated by a "~" will appear on a device. If a line is indented then it is a continuation of the previous line and the two combined represent the entire Device Marking for that device.

(6) Lead/Ball Finish - Orderable Devices may have multiple material finish options. Finish options are separated by a vertical ruled line. Lead/Ball Finish values may wrap to two lines if the finish value exceeds the maximum column width.

Important Information and Disclaimer: The information provided on this page represents TI's knowledge and belief as of the date that it is provided. TI bases its knowledge and belief on information provided by third parties, and makes no representation or warranty as to the accuracy of such information. Efforts are underway to better integrate information from third parties. TI has taken and continues to take reasonable steps to provide representative and accurate information but may not have conducted destructive testing or chemical analysis on incoming materials and chemicals. TI and TI suppliers consider certain information to be proprietary, and thus CAS numbers and other limited information may not be available for release.

In no event shall TI's liability arising out of such information exceed the total purchase price of the TI part(s) at issue in this document sold by TI to Customer on an annual basis.

GENERIC PACKAGE VIEW

DW 16

SOIC - 2.65 mm max height

7.5 x 10.3, 1.27 mm pitch

SMALL OUTLINE INTEGRATED CIRCUIT

This image is a representation of the package family, actual package may vary.
Refer to the product data sheet for package details.

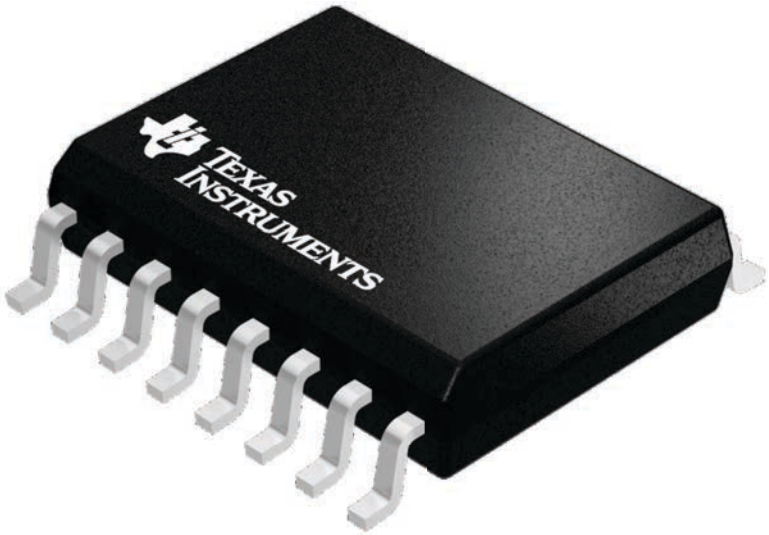

4224780/A

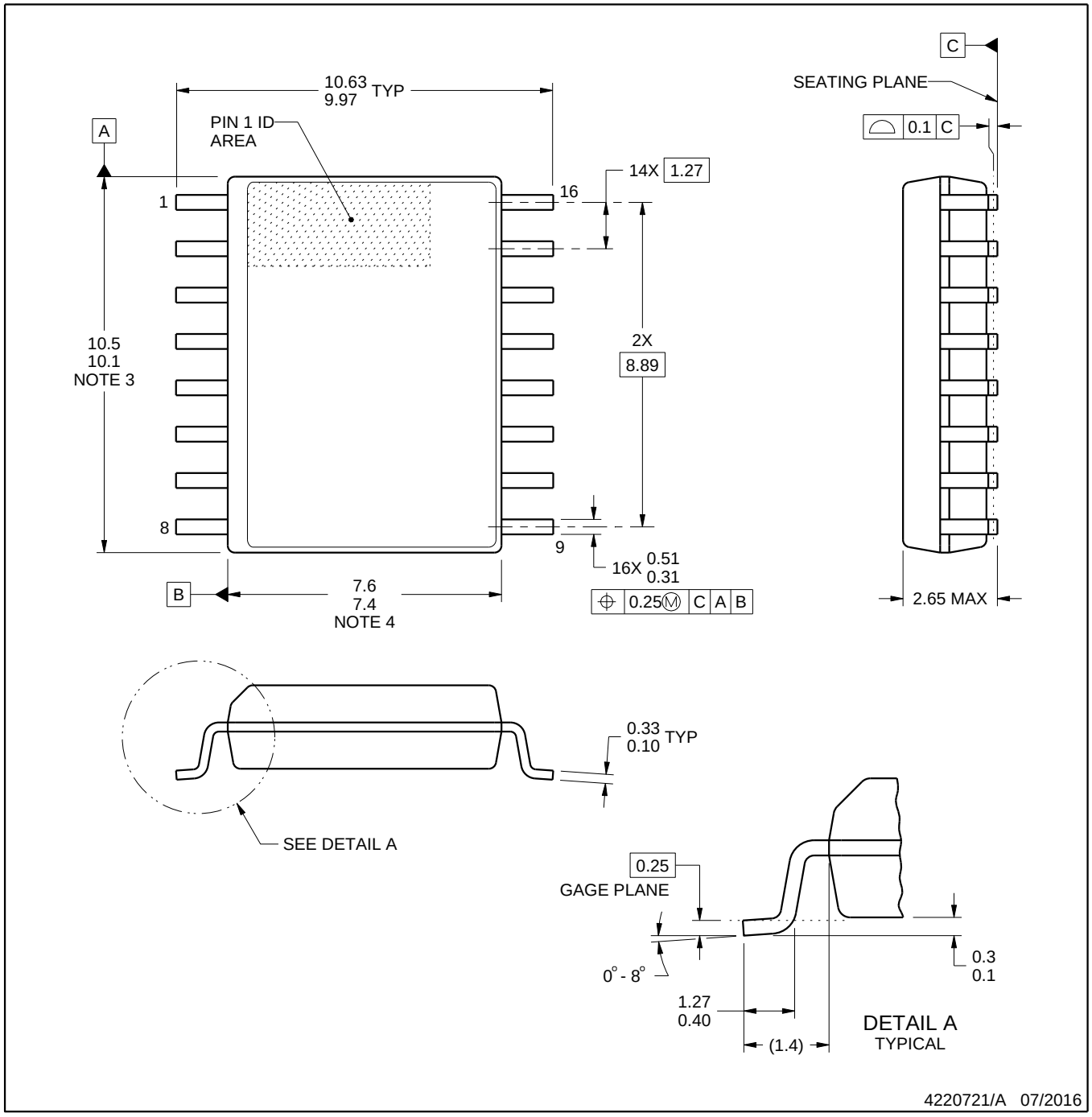

NOTES:

1. All linear dimensions are in millimeters. Dimensions in parenthesis are for reference only. Dimensioning and tolerancing per ASME Y14.5M.
2. This drawing is subject to change without notice.
3. This dimension does not include mold flash, protrusions, or gate burrs. Mold flash, protrusions, or gate burrs shall not exceed 0.15 mm, per side.
4. This dimension does not include interlead flash. Interlead flash shall not exceed 0.25 mm, per side.
5. Reference JEDEC registration MS-013.

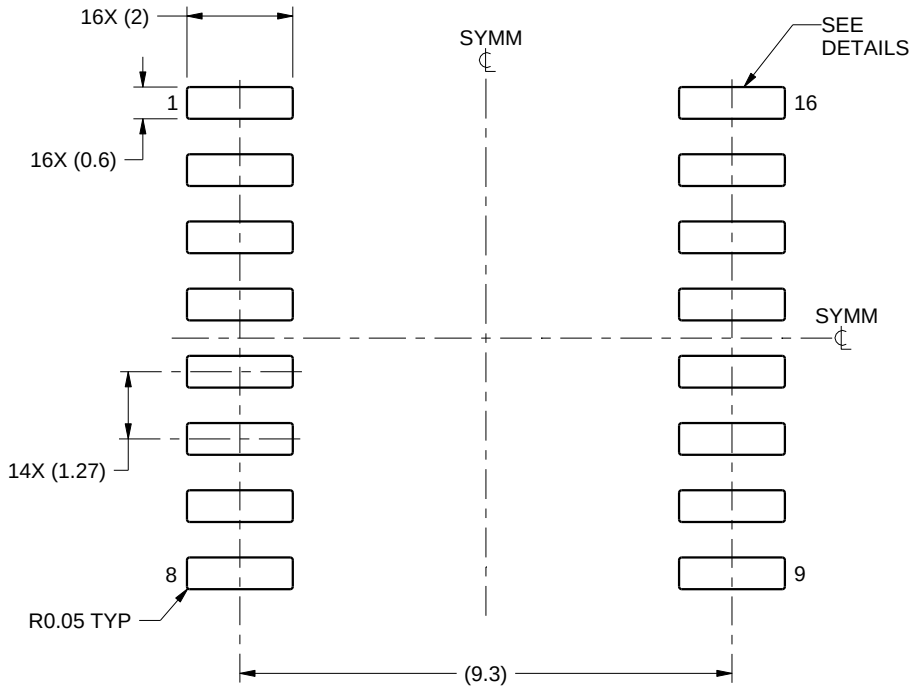

LAND PATTERN EXAMPLE
SCALE:7X

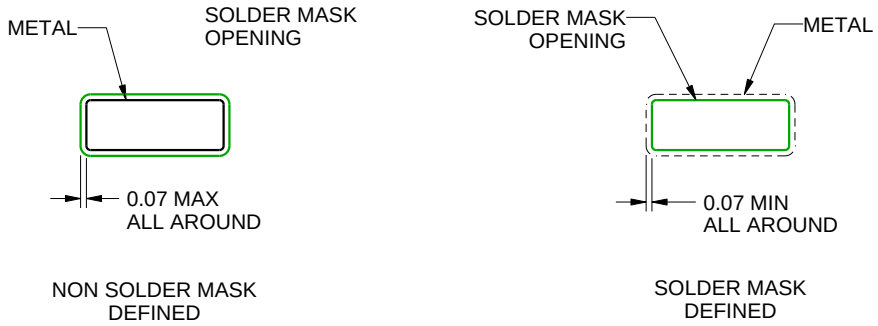

SOLDER MASK DETAILS

4220721/A 07/2016

NOTES: (continued)

6. Publication IPC-7351 may have alternate designs.
7. Solder mask tolerances between and around signal pads can vary based on board fabrication site.

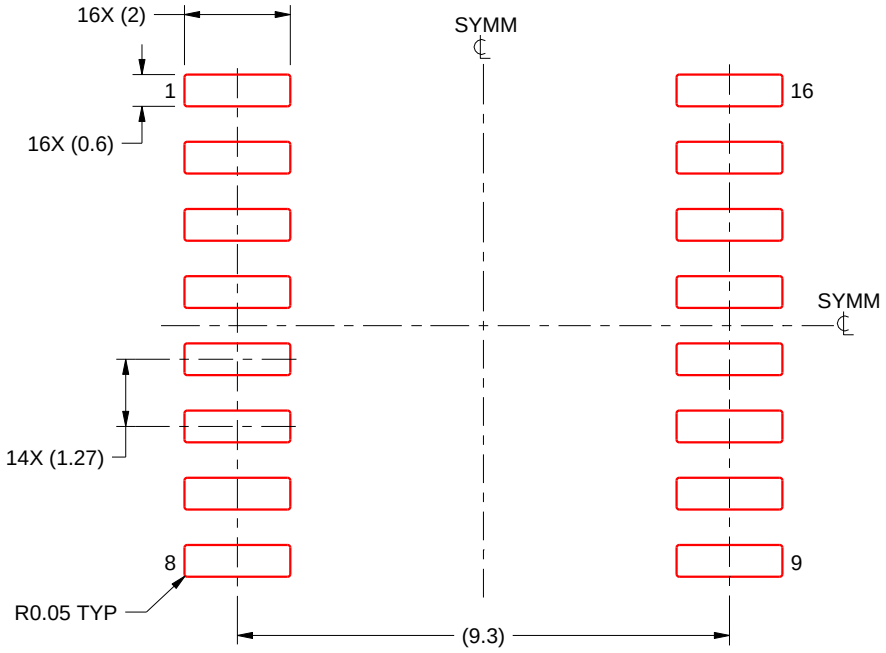

SOLDER PASTE EXAMPLE
BASED ON 0.125 mm THICK STENCIL
SCALE:7X

4220721/A 07/2016

NOTES: (continued)

8. Laser cutting apertures with trapezoidal walls and rounded corners may offer better paste release. IPC-7525 may have alternate design recommendations.
9. Board assembly site may have different recommendations for stencil design.

IMPORTANT NOTICE AND DISCLAIMER

TI PROVIDES TECHNICAL AND RELIABILITY DATA (INCLUDING DATASHEETS), DESIGN RESOURCES (INCLUDING REFERENCE DESIGNS), APPLICATION OR OTHER DESIGN ADVICE, WEB TOOLS, SAFETY INFORMATION, AND OTHER RESOURCES “AS IS” AND WITH ALL FAULTS, AND DISCLAIMS ALL WARRANTIES, EXPRESS AND IMPLIED, INCLUDING WITHOUT LIMITATION ANY IMPLIED WARRANTIES OF MERCHANTABILITY, FITNESS FOR A PARTICULAR PURPOSE OR NON-INFRINGEMENT OF THIRD PARTY INTELLECTUAL PROPERTY RIGHTS.

These resources are intended for skilled developers designing with TI products. You are solely responsible for (1) selecting the appropriate TI products for your application, (2) designing, validating and testing your application, and (3) ensuring your application meets applicable standards, and any other safety, security, or other requirements. These resources are subject to change without notice. TI grants you permission to use these resources only for development of an application that uses the TI products described in the resource. Other reproduction and display of these resources is prohibited. No license is granted to any other TI intellectual property right or to any third party intellectual property right. TI disclaims responsibility for, and you will fully indemnify TI and its representatives against, any claims, damages, costs, losses, and liabilities arising out of your use of these resources.

TI’s products are provided subject to TI’s Terms of Sale (www.ti.com/legal/termsofsale.html) or other applicable terms available either on ti.com or provided in conjunction with such TI products. TI’s provision of these resources does not expand or otherwise alter TI’s applicable warranties or warranty disclaimers for TI products.

Mailing Address: Texas Instruments, Post Office Box 655303, Dallas, Texas 75265
Copyright © 2020, Texas Instruments Incorporated